Silicone rubber insulating material for semiconductors

foil type	foil WS	foil WG	foil WK	foil WB
material	silicone foil, standard	silicone foil, GF reinforced	silicone foil, GF reinforced, one side self-adhesive	silicone foil, GF reinforced
washer				
TO-3	**WS 3**	**WG 3**	**WK 3**	**WB 3**
TO-3 M	**WS 3 M**			
TO-3/4	**WS 3/4**		**WK 3/4**	
TO-3 PF	**WS 3 P**	**WG 3 P**	**WK 3 P**	**WB 3 P**
3158	**WS 3158**		**WK 3158**	**WB 3158**
TOP 3	**WS TOP 3**			
TOP 3/1	**WS TOP 3/1**		**WK TOP 3/1**	
TO 218 (Multiwatt)		**WG 218**		
TO 247	**WS 247**		**WK 247**	
TO 220	**WS 220**	**WG 220**	**WK 220**	**WB 220**
4 X TO 220	**WS 4 220**			
3159	**WS 3159**		**WK 3159**	**WB 3159**
TO 126			**WK 126**	
SOT 32			**WK 32**	
TO 247/1	**WS 247/1**			
insulating tube				
TO-220 Ø 11 mm, length 25 mm	**WSC-220**			
TO-3 PF Ø 13.5 mm, length 25 mm	**WSC-3 P**			
TO-247 Ø 14.5 mm, length 30 mm	**WSC-247**			
insulating tube as meterpiece				
TO-220 Ø 11 mm	**WSM-220**			
TO-3 PF Ø 13.5 mm	**WSM-3 P**			
tape material (width)				
24 mm			**WKT 24**	
30 mm	**WST 30**		**WKT 30**	**WBT 30**
36 mm	**WST 36**	**WGT 36**	**WKT 36**	**WBT 36**
85 mm	**WST 85**		**WKT 85**	
300 mm		**WGT 300**	**WKT 300**	**WBT 300**

	Foil WS	**Foil WG**	**Foil WK**	**Foil WB**
colour	green			brown
material	silicone foil, standard	silicone foil, GF reinforced	silicone foil, GF reinforced, one side self-adhesive	silicone foil, GF reinforced
material thickness	0.3 mm $^{+0.1/-0}$	0.2 mm $^{+0.02/-0.04}$		0.15 mm $^{+0.02/-0.04}$
thermal resistance	0.4 K/W	0.42 K/W	0.45 K/W	0.34 K/W
hardness	75 IRHD	87 IRHD		92 IRHD
thermal conductivity	1.2 W/m·K	0.9 W/m·K		1.44 W/m·K
temperature range	-40°C... +150°C			
insulation resistance	$1 \cdot 10^{13}$ Ω·m			
elongation	100 %	2 %		
dielectric strength	10 kV	6 kV		3 kV
class of inflammability	UL 94 V-0			

fischer elektronik

Insulating caps

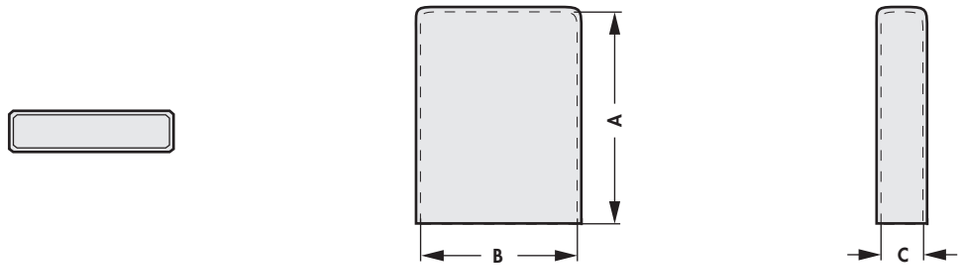

art. no.	type	dim. [mm]		
		A	B	C
WSI 220 225	TO 220	22.5	11	5.0
WSI TOP 3 280	TO 3 PL/TO 247	28.0	16	
WSI 220 210	TO 220	21.0	11	
WSI TOP 3 235	TOP 3	23.5	18	
WSI TO 3 PL	TO 3 PL/TO 247	34.0	22	5.5

	Foil WSI 0.3 mm	**Foil WSI 0.9 mm**
colour	green	
material thickness	0.3 mm $^{+0.1/-0}$	0.9 mm $^{+0.15/-0.1}$
thermal resistance	0.4 K/W	0.96 K/W
hardness	75 Shore A	
thermal conductivity	1.22 W/m·K	
temperature range	-60°C... +180°C	
insulation resistance	$2.9 \cdot 10^{15}$ Ω·cm	
elongation	100 %	
dielectric strength	10 kV	15 kV
class of inflammability	UL 94 V-0	

Thermally conductive foil made of siliconelastomer

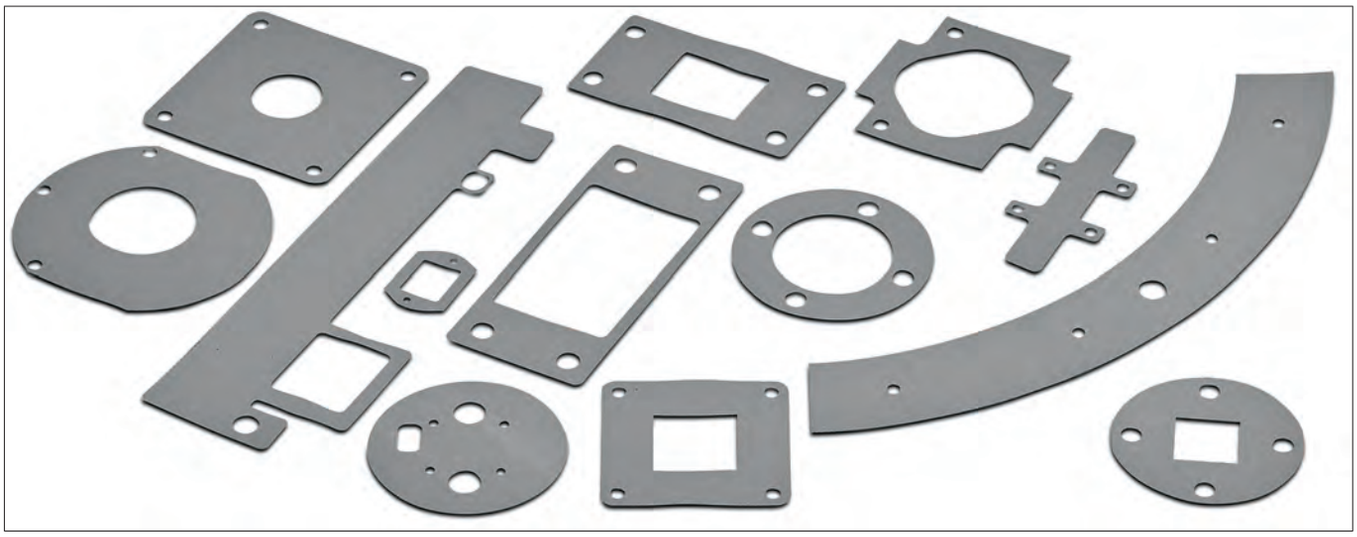

- silicone foil with glass fibre reinforcement
- free from toxic substances
- very good thermal and mechanical properties
- one-sided or double-sided adhesive layer upon request
- cuts and contours according to customer specific drawing specifications

art. no.	material thickness [mm]	**art. no.**	material thickness [mm]
WFS 09 18	0.178	**WFS 09 23**	0.229

	WFS 09 18	**WFS 09 23**
version	silicone foil with glass fibre reinforcement	
colour	grey	
hardness	85 Shore A	
thermal conductivity	0.9 W/m·K	
temperature range	-60°C... +180°C	
elongation	54 %	
volume resistance	10^{11} Ω·m	
dielectric constant	5.5 [1 kHz]	
tear strength	3,000 psi	
tensile strength	5 kN/m	
dielectric strength	3.5 kV	4.5 kV
class of inflammability	UL 94 V-0	
type of delivery	rolled goods, roll width 300mm/ cuttings on customer's requirement	

Thermal resistances vs. contact pressure / surface TO 220					
pressure [psi]	10	25	50	100	200
thermal resistance WFS 09 18 [K/W]	6.62	5.93	5.14	4.38	3.61
thermal resistance WFS 09 23 [K/W]	8.51	7.62	6.61	5.63	4.64
thermal impedance WFS 09 18 [K-cm²/W]	11.37	8.87	7.06	5.12	3.37
thermal impedance WFS 09 23 [K-cm²/W]	14.62	11.43	9.06	6.56	4.31

fischer elektronik

Thermally conductive foil made of siliconelastomer

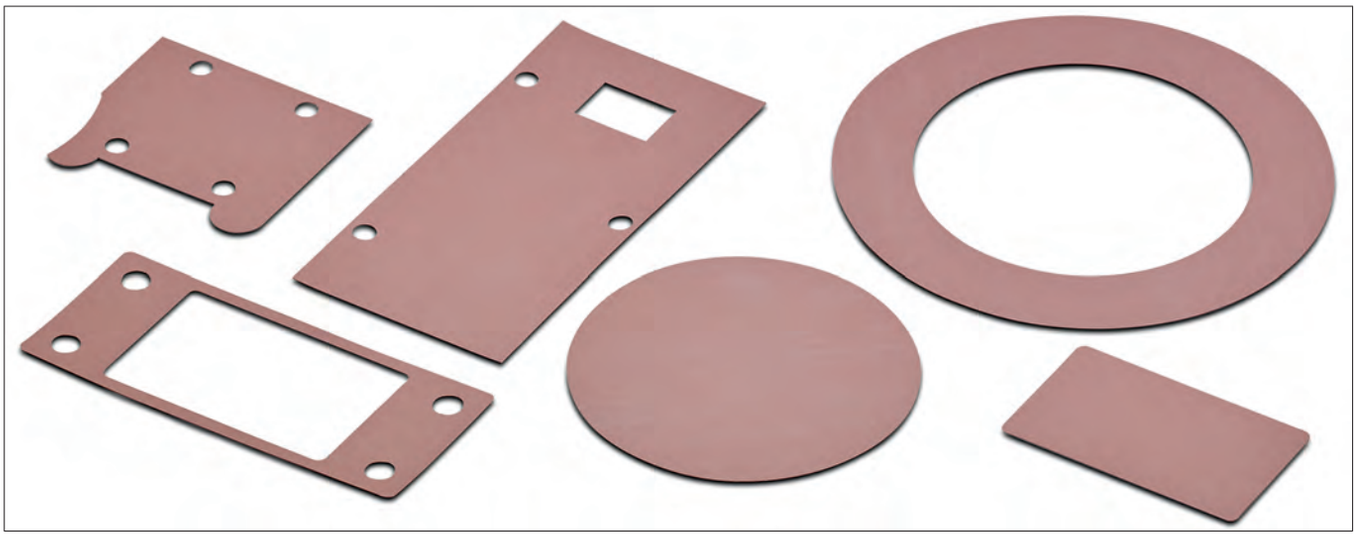

- very good suitable for low tightening torques or spring applications
- good electrical insulating properties
- optimal contacting between device and heatsink
- one-sided adhesive layer upon request
- cuts and contours according to customer specific drawing specifications

art. no.	material thickness [mm]
WFS 16	0.229

	WFS 16
version	silicone foil with glass fibre reinforcement
colour	pink
hardness	92 Shore A
thermal conductivity	1.6 W/m·K
temperature range	-60°C... +180°C
elongation	20 %
volume resistance	10^{10} Ω·m
dielectric constant	6 [1 kHz]
tear strength	1,300 psi
dielectric strength	5.5 kV
class of inflammability	UL 94 V-0
type of delivery	rolled goods, roll width 300mm/ cuttings on customer's requirement

Thermal resistances vs. contact pressure / surface TO 220					
pressure [psi]	10	25	50	100	200
thermal resistance WFS 16 [K/W]	3.96	3.41	2.90	2.53	2.32
thermal impedance WFS 16 [K-cm²/W]	5.93	4.68	3.81	2.93	2.56

Thermally conductive foil made of siliconelastomer

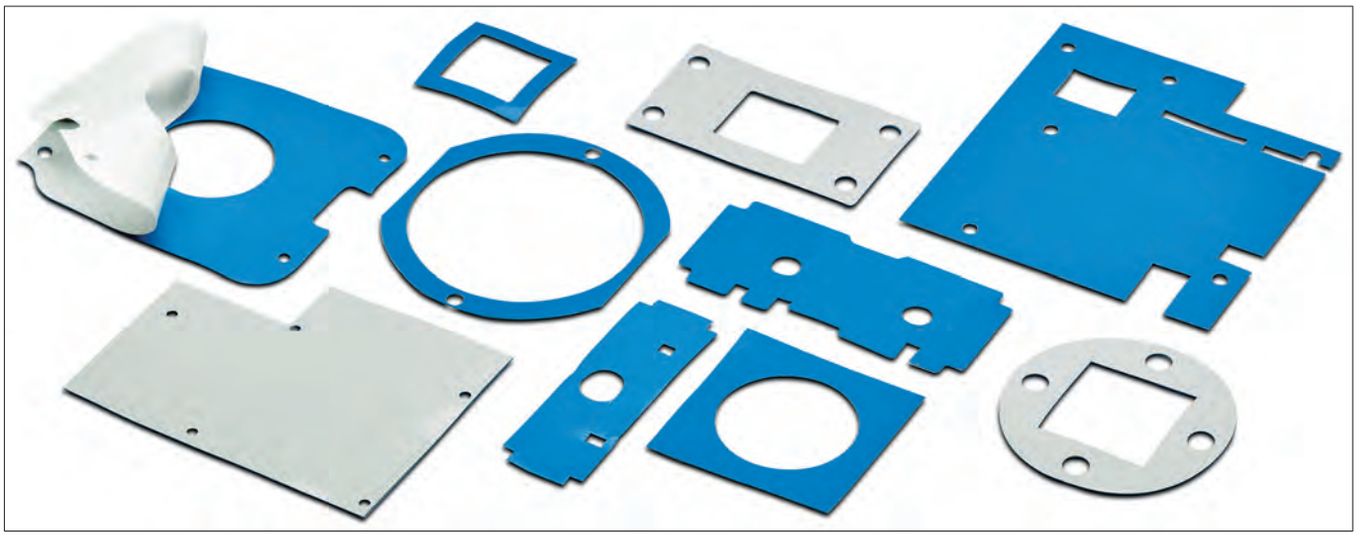

- silicone material with glass fibre reinforcement
- optimal contacting between device and heatsink
- simplified mounting by means of double-sided adhesive layer
- automatic assembling possible
- cuts and contours according to customer specific drawing specifications

art. no.	material thickness [mm]
WFS 18	0.203

	WFS 18
version	silicone foil with glass fibre reinforcement
colour	blue
hardness	75 Shore A
thermal conductivity	1.8 W/m·K
temperature range	-60°C... +180°C
elongation	22 %
volume resistance	10^{11} Ω·m
dielectric constant	6.1 [1 kHz]
tear strength	238 psi
tensile strength	0,34 kN/m
dielectric strength	3 kV
class of inflammability	UL 94 V-0
type of delivery	rolled goods, roll width 250mm/ cuttings on customer's requirement

Thermal resistances vs. contact pressure / surface TO 220					
pressure [psi]	10	25	50	100	200
thermal resistance WFS 18 [K/W]	1.54	1.52	1.51	1.49	1.46
thermal impedance WFS 18 [K-cm²/W]	2.31	1.75	1.43	1.31	1.25

fischer elektronik

Thermally conductive foil made of siliconelastomer

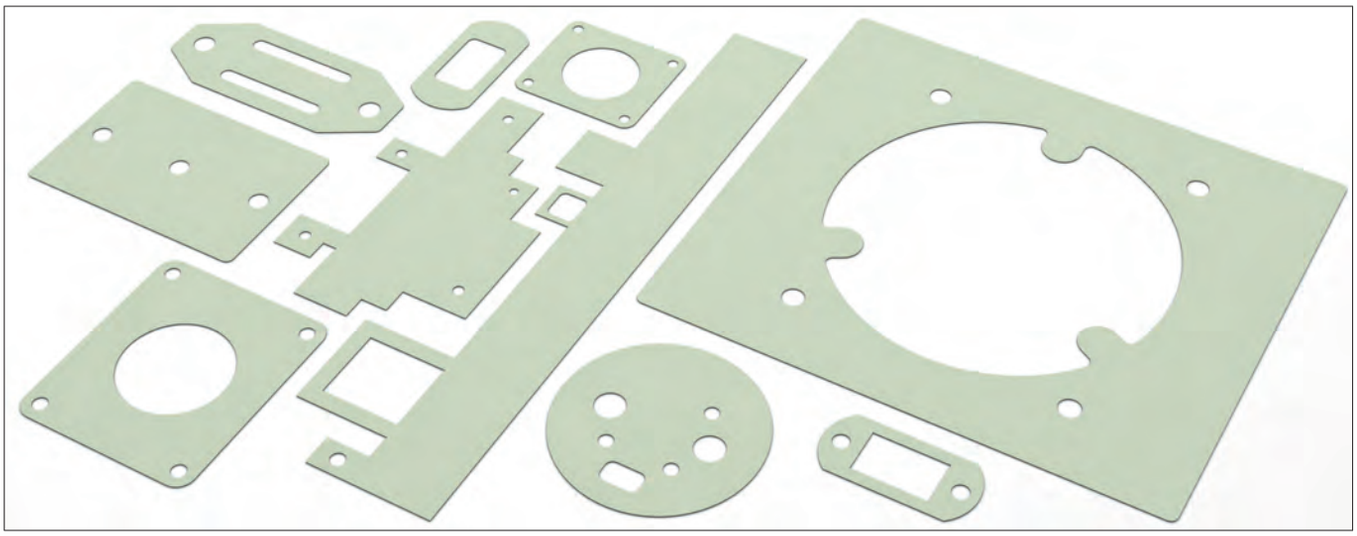

- silicone foil with a high operating temperature range
- high mechanical stability
- easy handling and application
- cuts, punch-outs and contours according to customer-specific drawing specifications

art. no.	material thickness [mm]	art. no.	material thickness [mm]
WFK 18	0.225	**WFK 18 GK**	0.250
WFK 18 G		**WFK 18 K**	

	WFK 18	**WFK 18 G**	**WFK 18 GK**	**WFK 18 K**
version	silicone foil without glass fibre reinforcement, one-sided protection foil	silicone foil with glass fibre reinforcement, one-sided protection foil	silicone foil with glass fibre reinforcement and one-sided adhesive layer, one-sided protection foil	silicone foil without glass fibre reinforcement and one-sided adhesive layer, one-sided protection foil
colour	lime-green			
density	2.29 g/cm³			
hardness	65 - 75 Shore A			
thermal conductivity	1.8 W/m·K			
thermal resistance	0.32 K/W	0.5 K/W	0.55 K/W	0.39 K/W
temperature range	-60°C ... +250°C			
elongation	75 %			
volume resistance	$2.5 \cdot 10^{11}$ Ω·m			
dielectric constant	2.9 [1 kHz]			
tensile strength	2 N/mm²	7,5 N/mm²		2 N/mm²
dielectric strength	8 kV			
class of inflammability	UL 94 V-0			
type of delivery	plates, usable area 300x250mm/ other dimensions upon request			

Thermal resistances vs. contact pressure				
pressure [psi]	**7.25**	**29**	**58**	**87**
thermal resistance WFK 18 [K/W]	0.50	0.42	0.37	0.33
thermal impedance WFK 18 [K-cm²/W]	1.75	1.38	1.25	1.18

Thermally conductive foil made of siliconelastomer

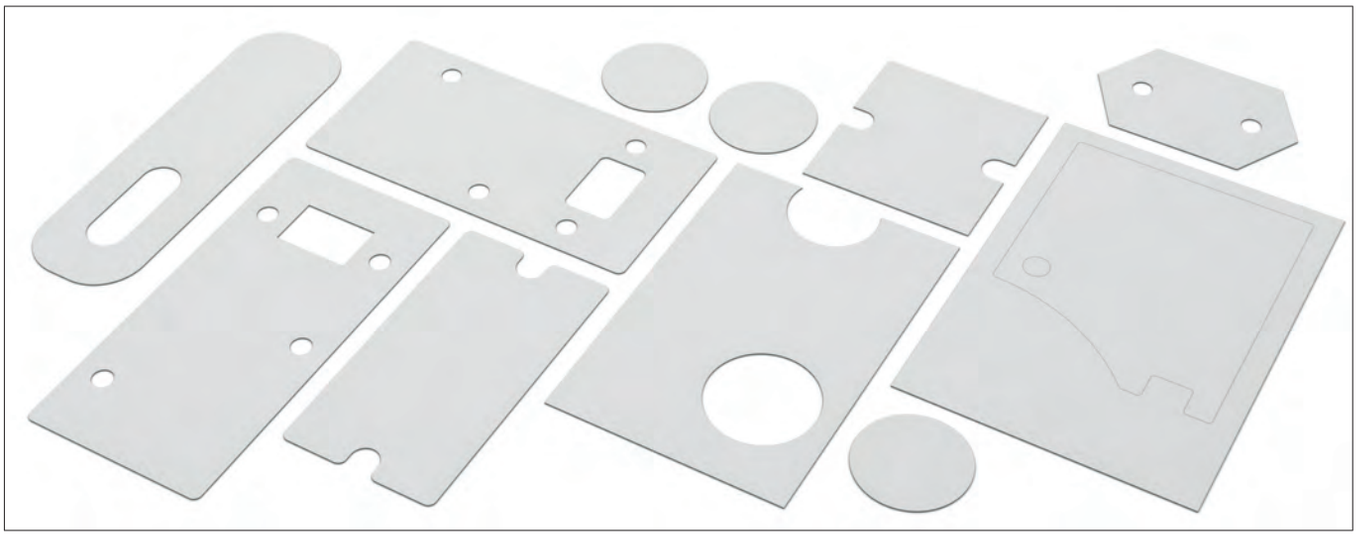

- silicone foil with very good thermal properties
- good electrical insulation resistance
- easy handling and application
- cuts and contours according to customer specifications

art. no.	material thickness [mm]	art. no.	material thickness [mm]
WFK 25	0.225	**WFK 25 GK**	0.250
WFK 25 G		**WFK 25 K**	

	WFK 25	**WFK 25 G**	**WFK 25 GK**	**WFK 25 K**
version	silicone foil without glass fibre reinforcement, one-sided protection foil	silicone foil with glass fibre reinforcement, one-sided protection foil	silicone foil with glass fibre reinforcement and one-sided adhesive layer, one-sided protection foil	silicone foil without glass fibre reinforcement and one-sided adhesive layer, one-sided protection foil
colour	white			
density	2.33 g/cm³			
hardness	70 - 80 Shore A			
thermal conductivity	2.5 W/m·K			
thermal resistance	0,22 K/W	0,25 K/W	0,3 K/W	0,265 K/W
temperature range	-60°C ... +250°C			
elongation	31 %			
volume resistance	$2.5 \cdot 10^{11}$ Ω·m			
dielectric constant	3 [1 kHz]			
tensile strength	1,5 N/mm²	7,5 N/mm²		1,5 N/mm²
dielectric strength	1.5 kV			
class of inflammability	UL 94 V-0			
type of delivery	plates, usable area 300x250mm/ other dimensions upon request		plates, usable area 300x235mm/ other dimensions upon request	

Thermal resistances vs. contact pressure				
pressure [psi]	**7.25**	**29**	**58**	**87**
thermal resistance WFK 25 [K/W]	0.38	0.33	0.30	0.27
thermal impedance WFK 25 [K-cm²/W]	1.13	1.00	0.92	0.83

fischer elektronik

Thermally conductive foil made of siliconelastomer

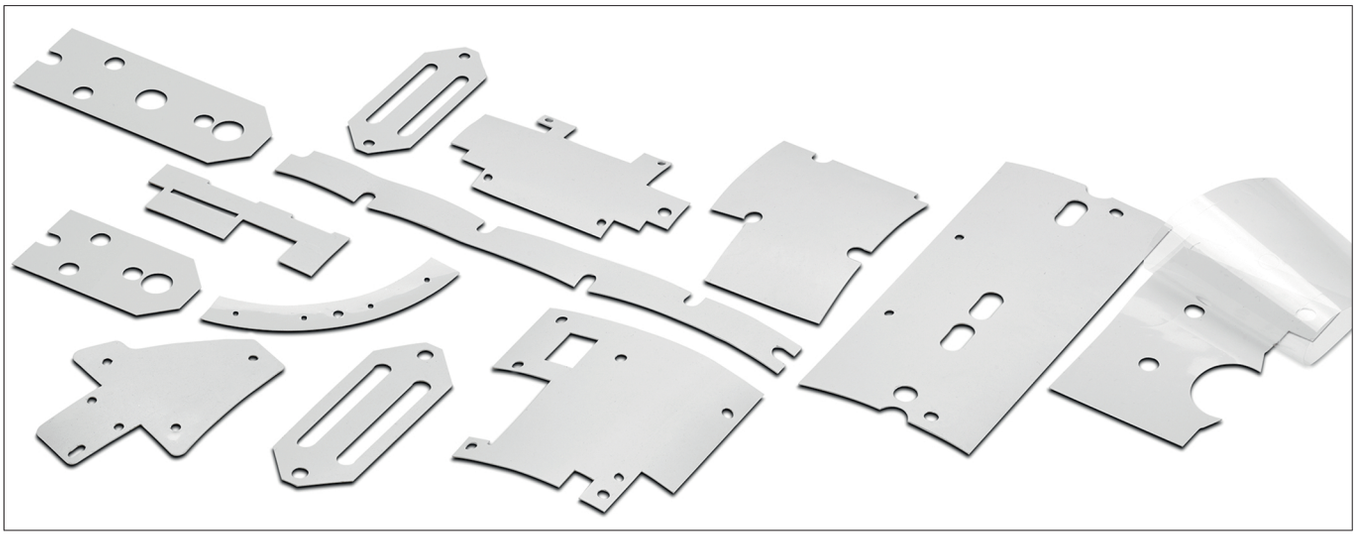

- silicone-foil with very good thermal properties
- excellent insulating properties
- simple and stable handling by means of glass fibre carrier material
- one-sided adhesive layer upon request
- cuts and contours according to customer specific drawing specifications

art. no.	material thickness [mm]
WFSA 30 50	0.508

	WFSA 30 50
version	silicone foil with glass fibre reinforcement
colour	white
hardness	90 Shore A
thermal conductivity	3 W/m·K
temperature range	-60°C ... +200°C
volume resistance	10^{11} Ω·m
dielectric constant	7 [1 kHz]
heat capacity	1 J/g·K
dielectric strength	4 kV
class of inflammability	UL 94 V-0
type of delivery	rolled goods, roll width 250mm/ cuttings on customer's requirement

Thermally conductive foil made of siliconelastomer

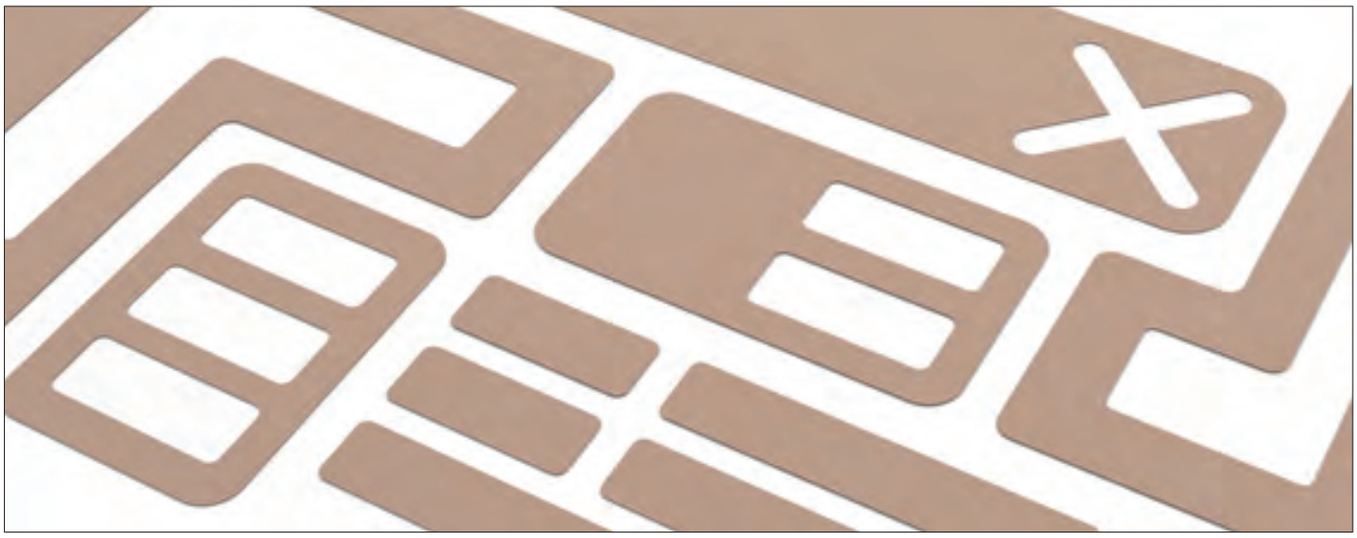

- silicone material with glass fibre reinforcement
- very good thermal conductivity, electrical insulating
- excellent mechanical and physical properties
- cuttings and different punchings on customer's requirement

art. no.	material thickness [mm]	art. no.	material thickness [mm]
WFF 33 02	0.2	**WFF 33 02 K**	0.2
WFF 33 03	0.3	**WFF 33 03 K**	0.3

	WFF 33 02	**WFF 33 03**	**WFF 33 02 K**	**WFF 33 03 K**
version	silicone foil with glass fibre reinforcement		silicone foil with glass fibre reinforcement, double-sided adhesive layer	
colour	light brown			
density	2.7 g/cm³			
hardness	80 IRHD	94 IRHD	80 IRHD	94 IRHD
thermal conductivity	3.3 W/m·K			
temperature range	-40°C... +150°C			
elongation	3 %			
volume resistance	$1.6 \cdot 10^{12}$ W·m	$1.8 \cdot 10^{12}$ W·m	$1.6 \cdot 10^{12}$ W·m	$1.8 \cdot 10^{12}$ W·m
dielectric constant	2.9 [50Hz] / 2.8 [1kHz] / 2.8 [1MHz]	3.6 [50Hz] / 3.6 [1kHz] / 3.6 [1MHz]	2.9 [50Hz] / 2.8 [1kHz] / 2.8 [1MHz]	3.6 [50Hz] / 3.6 [1kHz] / 3.6 [1MHz]
heat capacity	1 J/g·K			
tear strength	782 psi	810 psi	782 psi	810 psi
dielectric strength	6 kV	9 kV	6 kV	9 kV
class of inflammability	UL 94 V-0			
type of delivery	rolled goods, different roll widths on request/ cuttings on customer's requirement			

fischer elektronik

Thermally conductive foil made of siliconelastomer

- silicone foil with very good thermal conduction properties
- high dimensional stability due to glass fibre layer
- good electrical properties
- excellent processing properties
- contour and drawing parts according to customer specifications

art. no.	material thickness [mm]
WFS 34 020	0.20
WFS 34 030	0.30
WFS 34 045	0.45

	WFS 34
version	silicone foil with glass fibre reinforcement
colour	dark gray
density	2.84 g/cm³
hardness	90 Shore A
thermal conductivity	3.4 W/m·K
temperature range	-40°C ... +180°C
volume resistance	$3 \cdot 10^{13}$ Ω·cm
dielectric strength	7 kV
class of inflammability	UL 94 V-0
type of delivery	rolled goods, roll width 300mm/ other dimensions upon request

Thermally conductive foil made of siliconelastomer

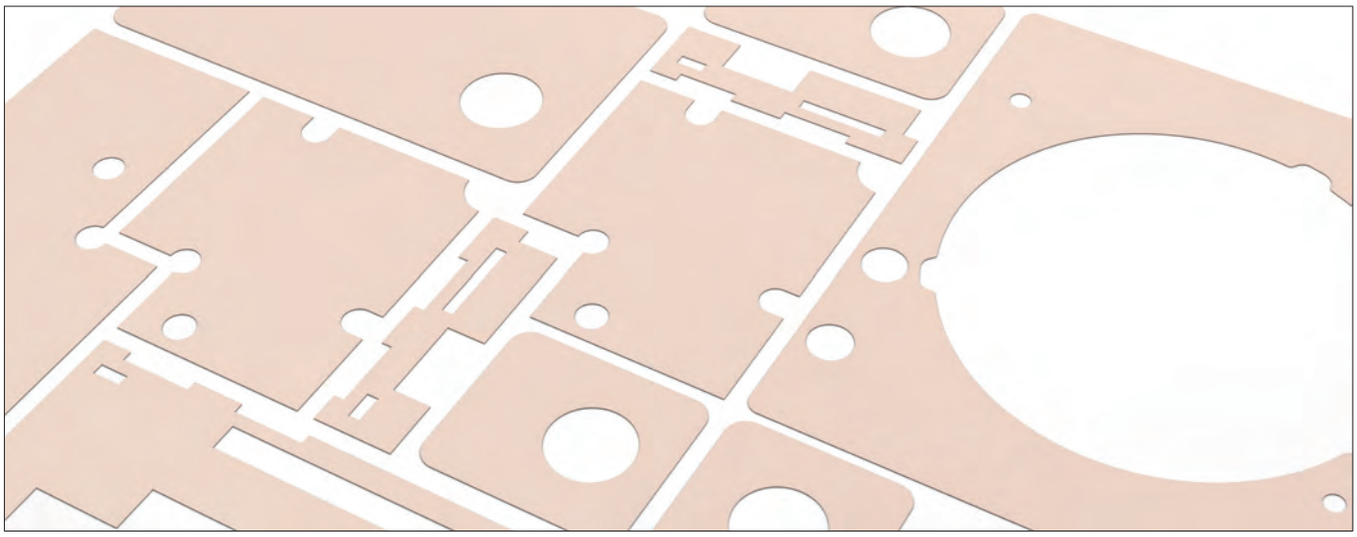

- silicone foil with very good thermal conductivity
- high insulation and dielectric strength
- very large operating temperature range
- one-sided adhesive coating as an mounting aid
- customer-specific cuts and punch-outs according to drawing

art. no.	material thickness [mm]
WFK 35 012	0.125
WFK 35 022	0.225
WFK 35 G	
WFK 35 GK	0.250
WFK 35 K	

	WFK 35	**WFK 35 G**	**WFK 35 GK**	**WFK 35 K**
version	silicone foil without glass fibre reinforcement, one-sided protection foil	silicone foil with glass fibre reinforcement, one-sided protection foil	silicone foil with glass fibre reinforcement and one-sided adhesive layer, one-sided protection foil	silicone foil without glass fibre reinforcement and one-sided adhesive layer, one-sided protection foil
colour	pink			
density	1.97 g/cm³			
hardness	70 - 80 Shore A			
thermal conductivity	3.5 W/m·K			
thermal resistance	0.16 K/W	0.22 K/W	0.27 K/W	0.26 K/W
temperature range	-60°C ... +250°C			
elongation	25 %			
volume resistance	$1.3 \cdot 10^{14}$ Ω·m			
dielectric constant	2.3 [1 kHz]			
tensile strength	1,3 N/mm²	10 N/mm²		1,3 N/mm²
dielectric strength	1.5 kV			
class of inflammability	UL 94 V-0			
type of delivery	plates, usable area 300x250mm/ other dimensions upon request		plates, usable area 300x235mm/ other dimensions upon request	

Thermal resistances vs. contact pressure				
pressure [psi]	**7.25**	**29**	**58**	**87**
thermal resistance WFK 35 [K/W]	0.25	0.21	0.17	0.15
thermal impedance WFK 35 [K-cm²/W]	0.94	0.81	0.75	0.56

fischer elektronik

Thermally conductive foil made of siliconelastomer

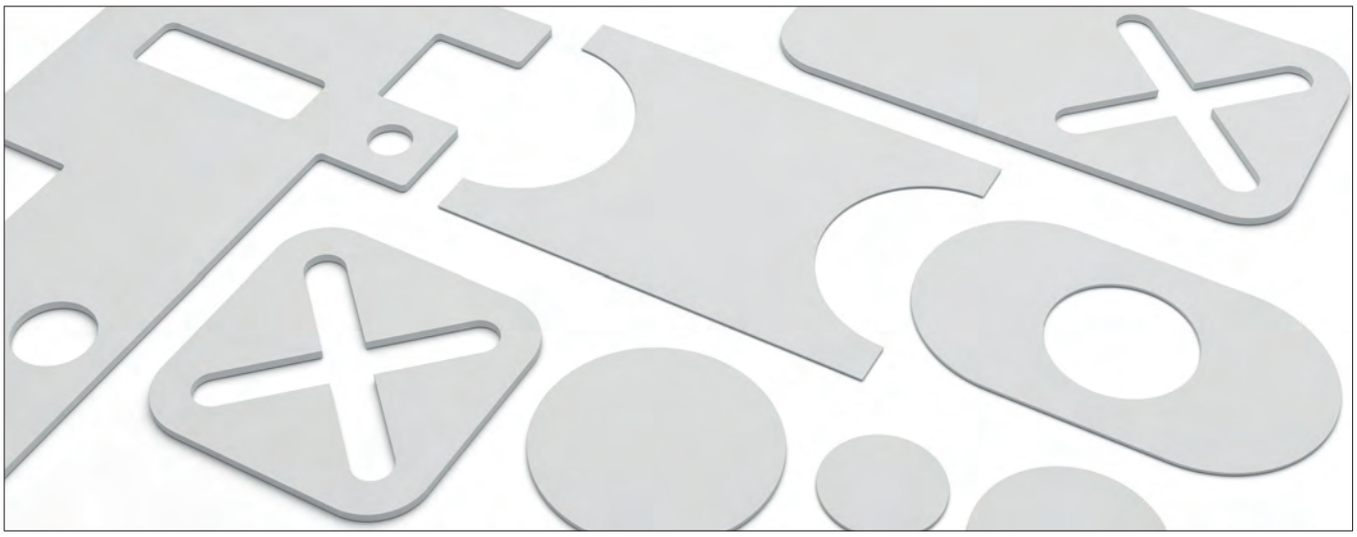

- silicone foil with ceramic filling and high thermal conductivity
- optimal connection of electronic components
- high mechanical stability and easy handling
- extreme aging- and chemical resistance
- special cuts or geometries according to customer specifications

art. no.	material thickness [mm]	art. no.	material thickness [mm]
WFC 50 02	0.20	**WFC 50 04**	0.45
WFC 50 03	0.30	**WFC 50 08**	0.80

	WFC 50 02	WFC 50 03	WFC 50 04	WFC 50 08
version	silicone foil with ceramic filling and glass fibre reinforced design			
colour	white			
thermal conductivity	5 W/m·K			
temperature range	-50°C ... +200°C			
volume resistance	$1.7 \cdot 10^{13}$ Ω·m	$7.9 \cdot 10^{13}$ Ω·m	$9.2 \cdot 10^{13}$ Ω·m	$8.9 \cdot 10^{13}$ Ω·m
dielectric constant	3.3 [1 MHz]			
dielectric strength	3 kV	6 kV	9 kV	>10 kV
class of inflammability	UL 94 V-0			
type of delivery	plates, usable area 440x510mm/ other dimensions upon request			

Thermal resistances vs. contact pressure		
pressure [psi]	**29**	**145**
thermische impedance WFC 50 02 [K-cm²/W]	1.87	0.71
thermische impedance WFC 50 03 [K-cm²/W]	2.06	0.96
thermische impedance WFC 50 04 [K-cm²/W]	2.26	1.10
thermische impedance WFC 50 08 [K-cm²/W]	3.35	1.74

Thermally conductive foil made of siliconelastomer

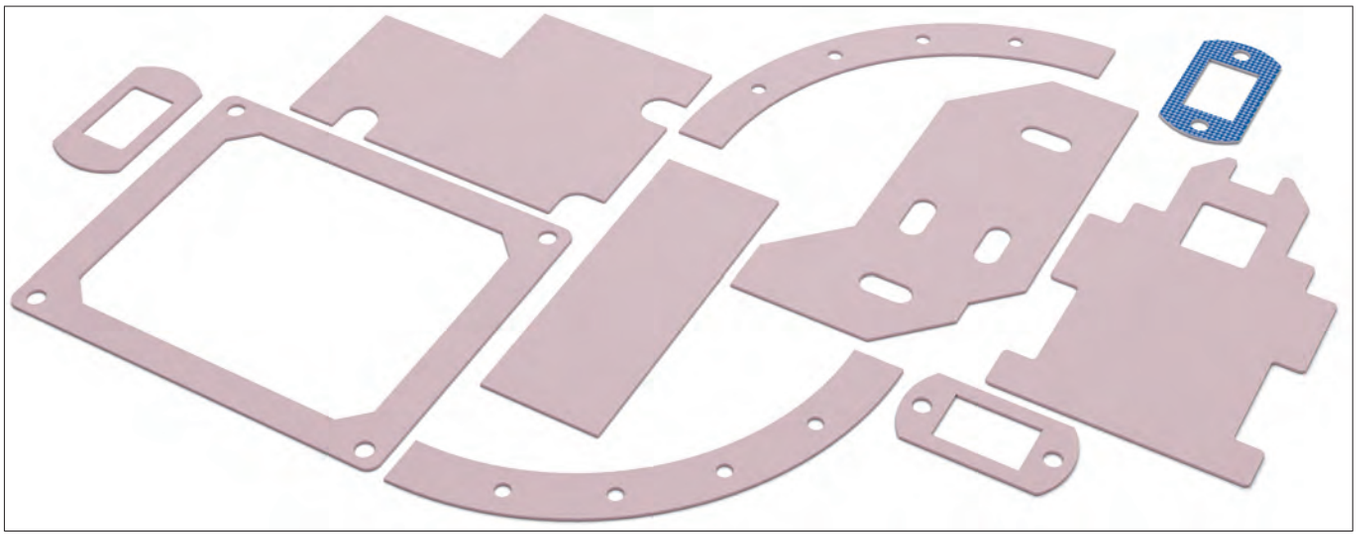

- silicone foil with excellent thermal conductivity
- very good electrical properties
- adhesive coating for easy assembly handling
- particularly suitable for high-performance applications
- cuts and contours according to customer's drawing specifications

art. no.	material thickness [mm]
WFK 65	0.250
WFK 65 K	0.275

	WFK 65	**WFK 65 K**
version	silicone foil without glass fibre reinforcement, one-sided protection foil	silicone foil with adhesive layer, one-sided protection foil
colour	red	
density	1.23 g/cm³	
hardness	60 - 70 Shore A	
thermal conductivity	6,5 W/m·K	
thermal resistance	0,09 K/W	
temperature range	-40°C... +200°C	
elongation	2 %	
volume resistance	$2 \cdot 10^{14}$ Ω·m	
dielectric constant	2.4 [1 kHz]	
tensile strength	13 N/mm²	
dielectric strength	1 kV	
class of inflammability	UL 94 V-0	
type of delivery	plates, usable area 300x250mm/ other dimensions upon request	plates, usable area 300x235mm/ other dimensions upon request

Thermal resistances vs. contact pressure				
pressure [psi]	**7.25**	**29**	**58**	**87**
thermal resistance WFK 65 [K/W]	0.18	0.12	0.10	0.08
thermal impedance WFK 65 [K-cm²/W]	0.68	0.50	0.39	0.31

fischer elektronik

Thermally conductive foil made of siliconelastomer

- silicone foil with excellent thermal conductivity
- very good insulation properties
- high material strength due to glass fibre reinforcement
- simple handling and application
- customised cuts and geometries according to drawing

art. no.	material thickness [mm]
WFS 80 020	0.20
WFS 80 030	0.30
WFS 80 045	0.45

	WFS 80
version	silicone foil with glass fibre reinforcement
colour	light gray
density	1.6 g/cm³
hardness	85 Shore A
thermal conductivity	8 W/m·K
temperature range	-40°C ... +180°C
volume resistance	$2.9 \cdot 10^{14}$ Ω·cm
tear strength	1,885 psi
tensile strength	45 kN/m
dielectric strength	7 kV
class of inflammability	UL 94 V-0
type of delivery	plates, usable area 420x500mm/ other dimensions upon request