VECO VANSONIC ENTERPRISE CO.,LTD.

ELITALIA

tel. 02.3361.1626 info@elitaliaweb.it
fax 02.2626.1009 www.elitaliaweb.it

1.	**MODEL:**	**36CR08FN** -M50NT(Clear Mylar) -M50ND(Black Mylar)
2.	Dimension	Outer Diameter **36** mm. Baffle Opening **32** mm.
		Height **Refer to Drawing** . Weight **7.5** Grams.
3.	Magnet	Materials **Rare Earth** . Size ∅ **12.5X 1.5** mm.
4	Nominal Lmpedance	**8** Ω ± **15** % At **1000** Hz.
5.	Power Rating	Normal **500** mW. Maximum **1000** mW.
6.	Lowest Resonant Frequency	**370** ± **20** % Hz.
7.	Output Sound Pressure Lever	**79** ± **3** db / 0.5 Watt **.** 0.5 Meter .
	(S.P.L.)	Average at **800, 1000, 1200, 1500** Hz.
8.	Frequency Range	**200** ~ **20000** Hz. Average S P L - 10 db.
9.	Distortion	**5** % Maximum At **1000** Hz. **500** mW.
10.	Abnormal Sound Test	Must Be Normal Test By **2.0** Volts. Sine Wave.
11.	Load Test	White Noise With Weighted Filter **2.0** Volts.(RMS) **24** Hrs.
12.	Polarity	Diaphragm shall move Forward when Apply a Positive DC.
		Current to the "+" or "Marked" Terminal.

MOUNTING NOTICE

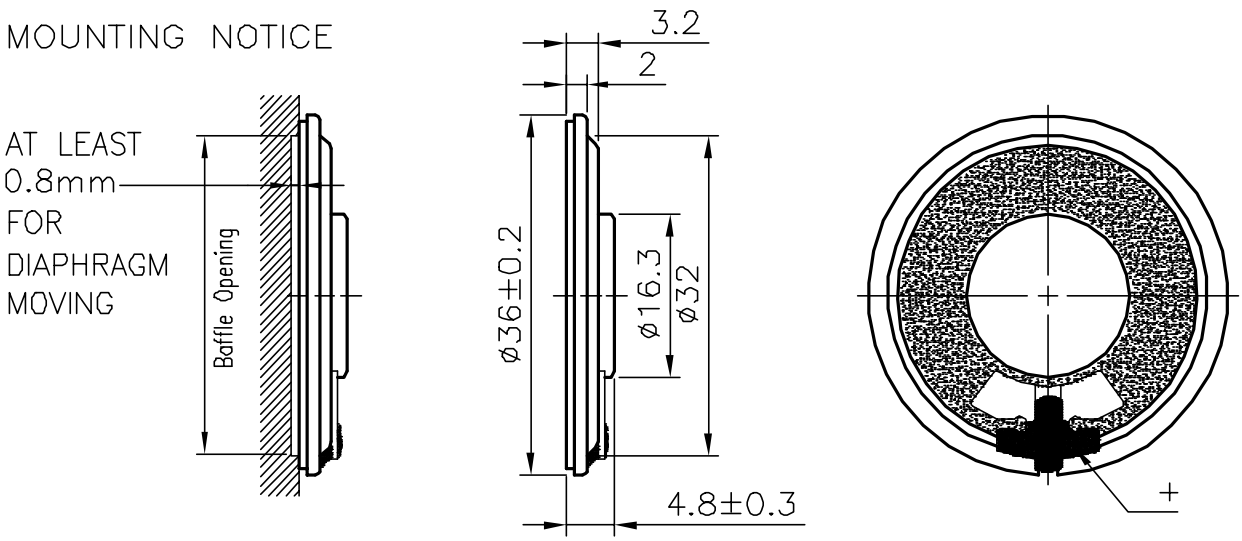

Unit : mm Housing Material : METAL

G:\36CF\50N\36CR08FN.DWG K11

36CR08FN-M50ND VOL:2.0V(0.5W) DIS:0.5M VANSONIC
X:1.0000kHz *Y:79.69dB ZA:1.0000 SSR Fund.

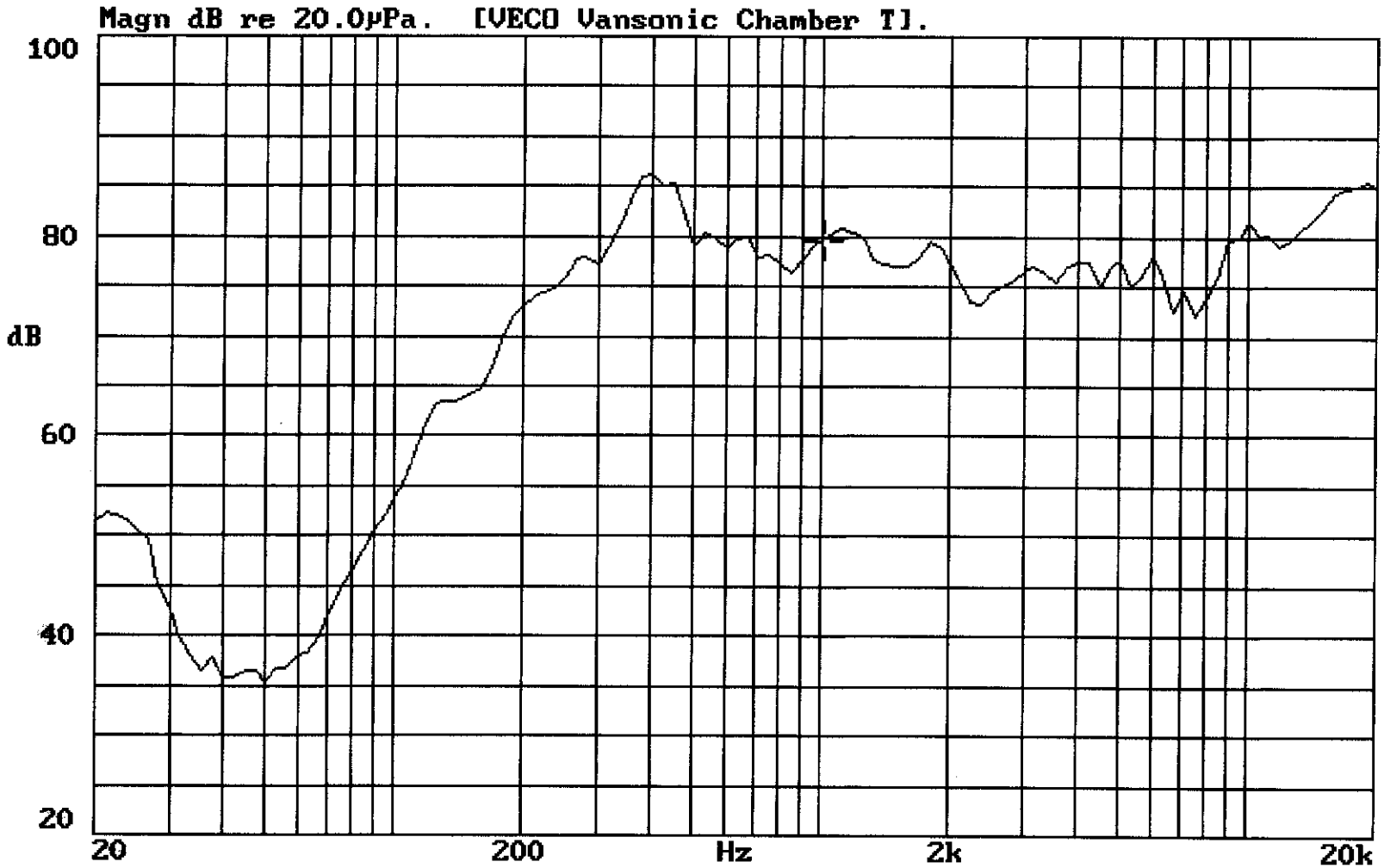

31-OCT-2001 10:28:59

Mode: SSR

VECO VANSONIC ENTERPRISE CO.,LTD.

ELITALIA tel. 02.3361.1626 info@elitaliaweb.it
fax 02.2626.1009 www.elitaliaweb.it

1.	**MODEL:**	**P36CSF08-1** -E75BT(Clear Mylar) -E75BD(Black Mylar)
2.	Dimension	Outer Diameter **ø36** mm. Baffle Opening **ø32** mm.
		Height **Refer to Drawing**. Weight **8.6** Grams.
3.	Magnet	Materials **Rare Earth** . Size **ø 12.5X 1.5** mm.
4	Nominal Lmpedance	**8** Ω ± **15** % At **1200** Hz.
5.	Power Rating	Normal **1000** mW. Maximum **1500** mW.
6.	Lowest Resonant Frequency	**580** ± **20** % Hz.
7.	Output Sound Pressure Lever	**89** ± **3** db / 0.5 Watt **.** 0.5 Meter.
	(S.P.L.)	Average at **800, 1000, 1200, 1500** Hz.
8.	Frequency Range	**350** ~ **6500** Hz. Average S P L - 10 db.
9.	Distortion	**5** % Maximum At **1000** Hz. **500** mW.
10.	Abnormal Sound Test	Must Be Normal Test By **2.83** Volts. Sine Wave.
11.	Load Test	White Noise With Weighted Filter **2.83** Volts.(RMS) **96** Hrs.
12.	Polarity	Diaphragm shall move Forward when Apply a Positive DC.
		Current to the "+" or "Marked" Terminal.

MOUNTING NOTICE

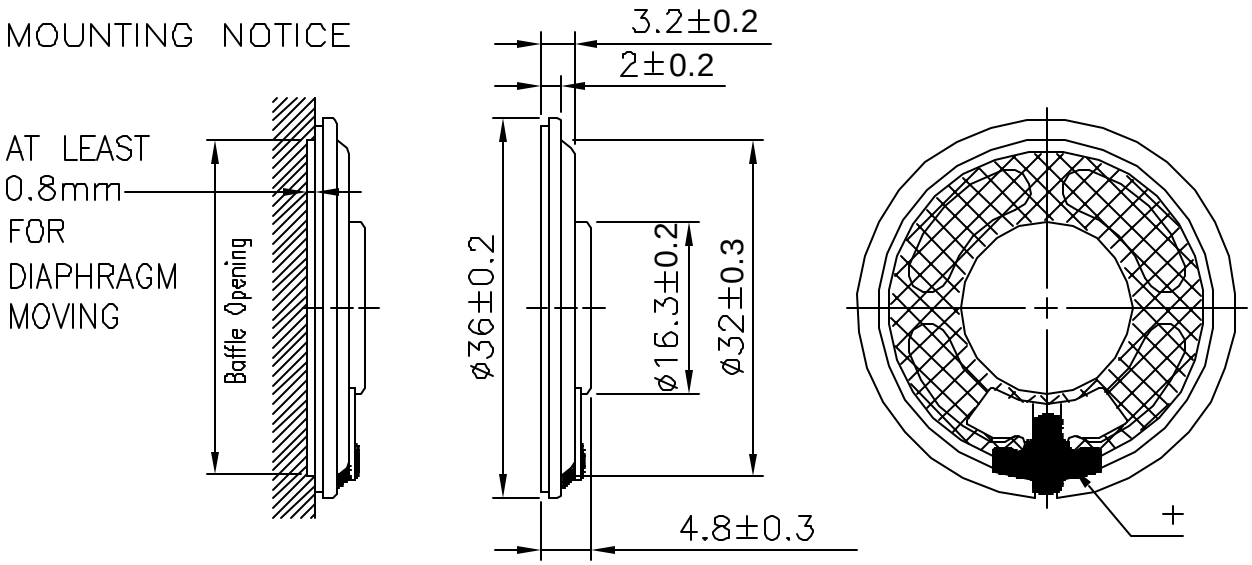

Unit : mm Housing Material : METAL

36CSF08-1-E75BT VOL:2.83V(1W) DIS:0.5M VANSONIC
X:1.0000kHz *Y:89.49dB ZA:1.0000 SSR Fund.

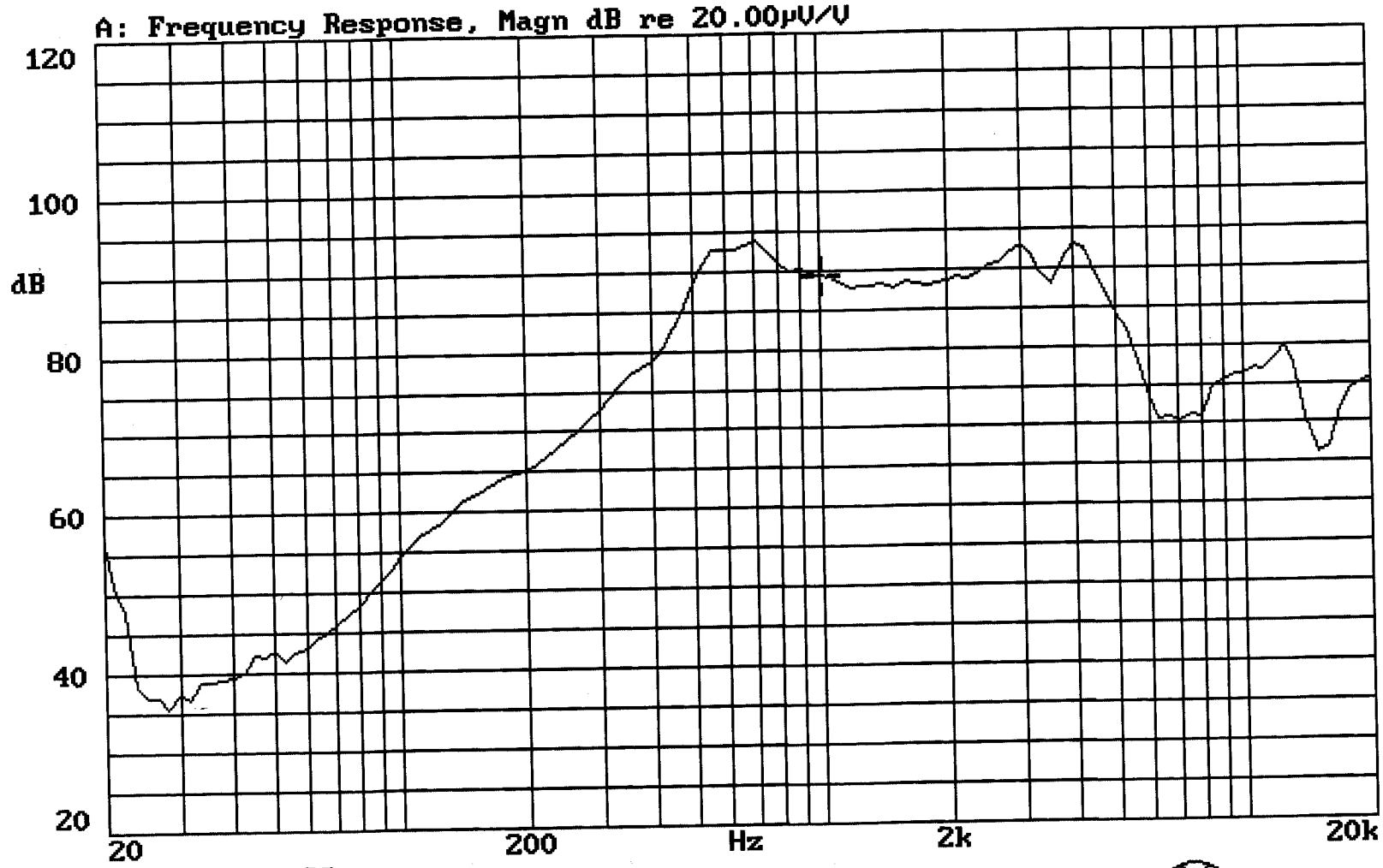

20-JUL-2004 14:42:22

Mode: SSR

VECO VANSONIC ENTERPRISE CO.,LTD.

ELITALIA
tel. 02.3361.1626 info@elitaliaweb.it
fax 02.2626.1009 www.elitaliaweb.it

1.	**MODEL:**	**36CS50G-2**-E75NT(Resistant High Temperature)
2.	Dimension	Outer Diameter **36** mm. Baffle Opening **32.5** mm.
		Height **Refer to Drawing .** Weight **4.6** Grams.
3.	Magnet	Materials **Rare Earth** . Size ø **12.5x1.5** mm.
4	Nominal Lmpedance	**50** Ω ± **15** % At **1500** Hz.
5.	Power Rating	Normal **200** mW. Maximum **400** mW.
6.	Lowest Resonant Frequency	**600** ± **20** % Hz.
7.	Output Sound Pressure Lever	**81** ± **3** db / 0.2 Watt · 0.5 Meter.
	(S.P.L.)	Average at **800, 1000, 1200, 1500** Hz.
8.	Frequency Range	**350** ~ **10000** Hz. Average S P L - 10 db.
9.	Distortion	**5** % Maximum At **1000** Hz. **200** mW.
10.	Abnormal Sound Test	Must Be Normal Test By **3.2** Volts. Sine Wave.
11.	Load Test	White Noise With Weighted Filter **3.2** Volts.(RMS) **96** Hrs.
12.	Storage Temperature	**-40°C ~ +90°C**
13.	Operating Temperature	**-40°C ~ +85°C**
14.	Polarity	Diaphragm shall move Forward when Apply a Positive DC.
		Current to the "+" or "Marked" Terminal.

MOUNTING NOTICE

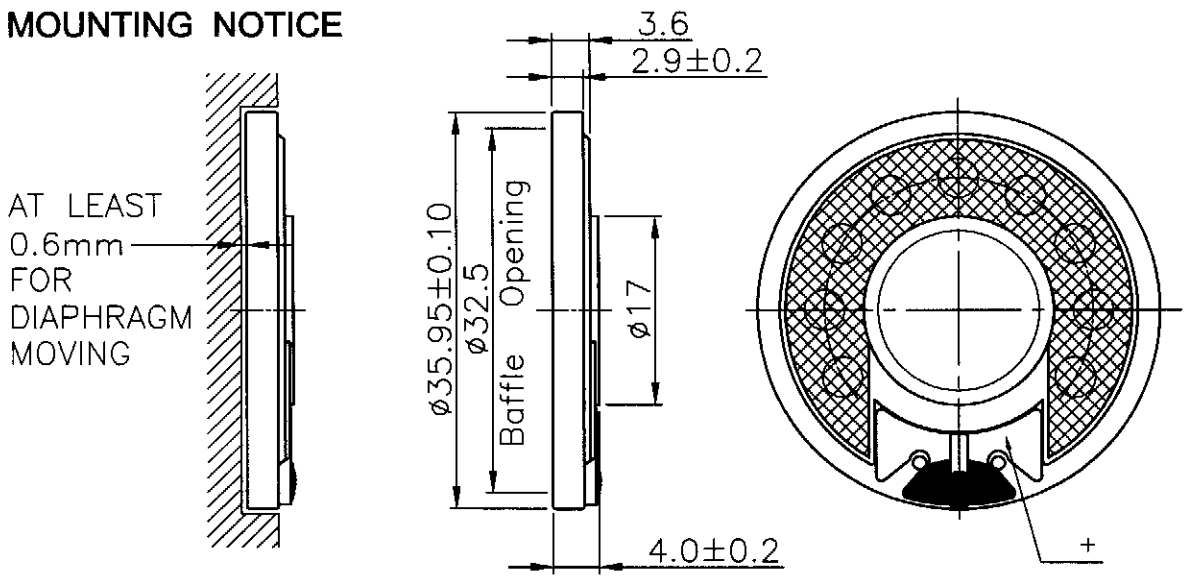

Unit : mm Housing Material : PBT

G:\VECO\36\36CSG\SPEC\36CS50G-2-E75NT(0.2W).DWG L04

36CS50G-2-E75NT Vol:3.162V(0.2W) Dis:0.5M VANSONIC
X:1.0000kHz *Y:81.22dB ZA:Live Curve SSR Fund.

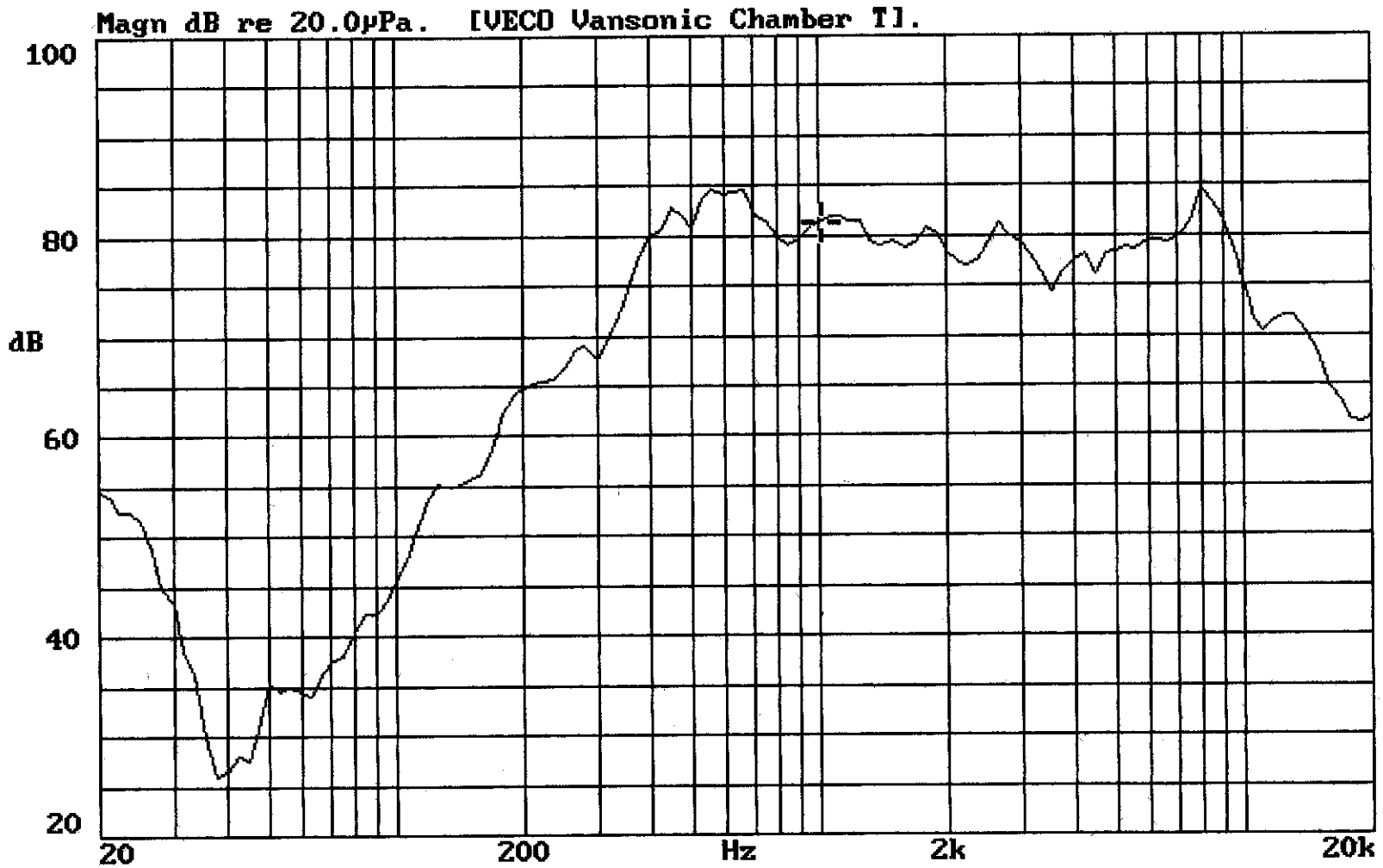

03-APR-2001 11:27:53

Mode: SSR

VECO VANSONIC ENTERPRISE CO.,LTD.

ELITALIA
tel. 02.3361.1626 info@elitaliaweb.it
fax 02.2626.1009 www.elitaliaweb.it

1.	MODEL:	36CS08G -M75NT(Clear Mylar)-M75ND(Black Mylar)
2.	Dimension	Outer Diameter 36 mm. Baffle Opening 33 mm.
		Height Refer to Drawing. Weight 4.6 Grams.
3.	Magent	Materials Rare Earth . Size ∅ 12.5X1.5 mm.
4	Nominal Impedance	8 Ω ± 15 % At 2000 Hz.
5.	Power Rating	Normal 200 mW. Maximum 400 mW.
6.	Lowest Resonant Frequency	530 ± 20 % Hz.
7.	Output Sound Pressure Lever	78 ± 3 db / 0.2 Watt . 0.5 Meter.
	(S.P.L.)	Average at 800, 1000, 1200, 1500 Hz.
8.	Frequency Range	400 ~ 5600 Hz. Average S P L - 10 db.
9.	Distortion	5 % Maximum At 1000 Hz. 200 mW.
10.	Abnormal Sound Test	Must be Normal Tested By 1.3 Volts. Sine Wave.
11.	Load Test	White Noise with Weighted Filter 1.3 Volts.(RMS) 24Hrs.
12.	Polarity	Diaphragm shall move Forward when Apply a Positive DC.
		Current to the "+" or "Marked" Terminal.

MOUNTING NOTICE

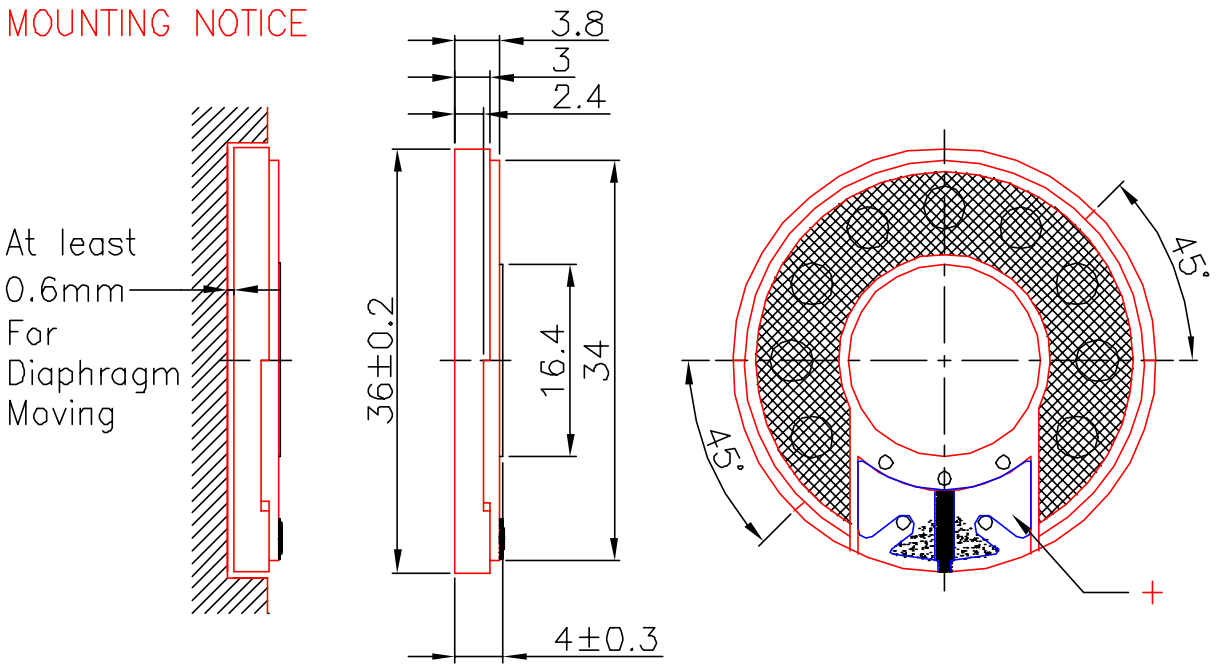

Unit : mm Housing Material : ABS

F:\\36C\36CS08G.DWG JD6

36CS08G-75NT Vol:1.265V(0.2W) Dis:0.5M VANSONIC
X:1.0000kHz *Y:77.31dB ZA:1.0000 SSR Fund.

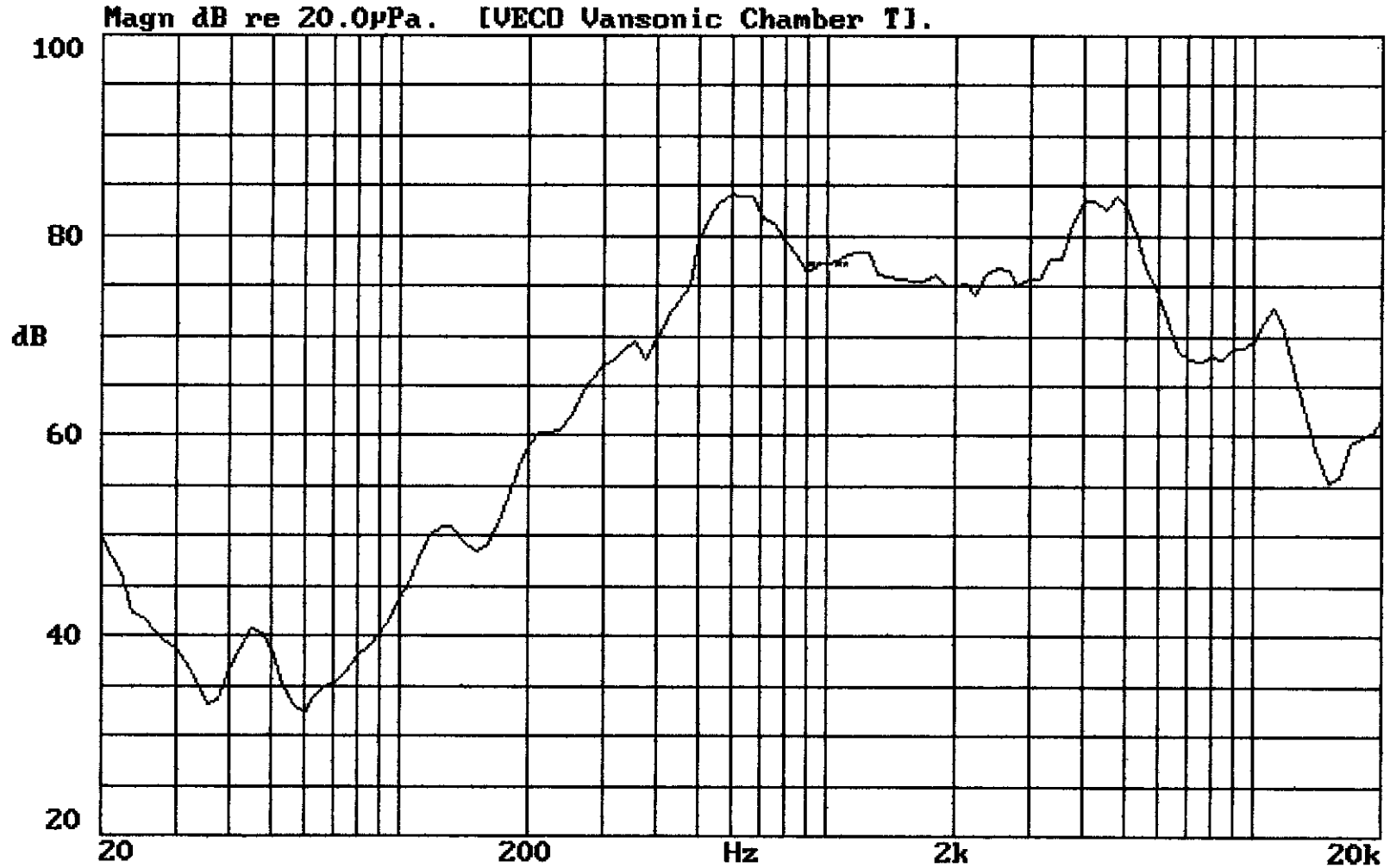

29-JUN-1999 15:17:06

Mode: SPEAKER

VECO VANSONIC ENTERPRISE CO.,LTD.

ELITALIA

tel. 02.3361.1626 info@elitaliaweb.it
fax 02.2626.1009 www.elitaliaweb.it

1.	MODEL:	36CS08G -M50NT(Clear Mylar)
2.	Dimension	Outer Diameter 36 mm. Baffle Opening 33 mm.
		Height Refer to Drawing. Weight 4.6 Grams.
3.	Magnet	Materials Rare Earth . Size ∅ 12.5X1.5 mm.
4	Nominal Impedance	8 Ω ± 15 % At 1500 Hz.
5.	Power Rating	Normal 100 mW. Maximum 200 mW.
6.	Lowest Resonant Frequency	420 ± 20 % Hz.
7.	Output Sound Pressure Lever	76 ± 3 db / 0.1 Watt . 0.5 Meter.
	(S.P.L.)	Average at 600, 800, 1000, 1200 Hz.
8.	Frequency Range	250 ~ 6000 Hz. Average S P L - 10 db.
9.	Distortion	5 % Maximum At 1000 Hz. 100 mW.
10.	Abnormal Sound Test	Must be Normal Tested By 0.9 Volts. Sine Wave.
11.	Load Test	White Noise with Weighted Filter 0.9 Volts.(RMS) 24Hrs.
12.	Polarity	Diaphragm shall move Forward when Apply a Positive DC.
		Current to the "+" or "Marked" Terminal.

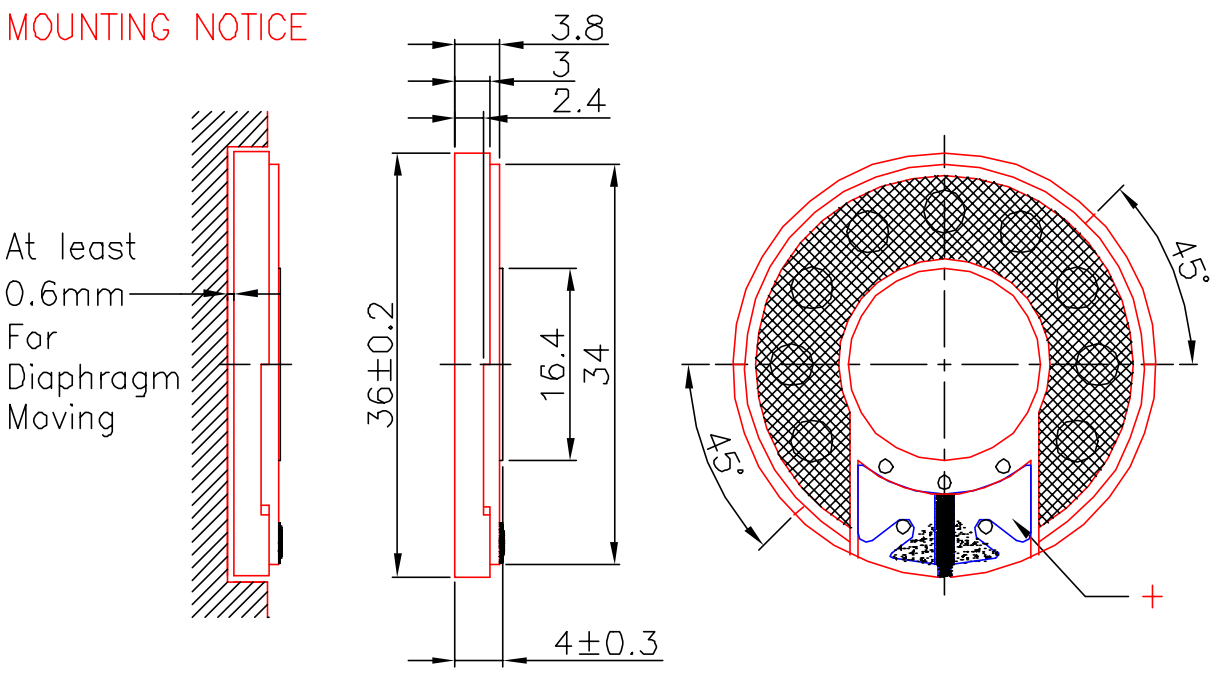

Unit : mm Housing Material : ABS

F:\\36C\36CS08G.DWG JD6

36CS08G-50NT Vol:0.894V(0.1W) Dis:0.5M VANSONIC
X:1.0000kHz *Y:74.50dB ZA:Live Curve SSR Fund.

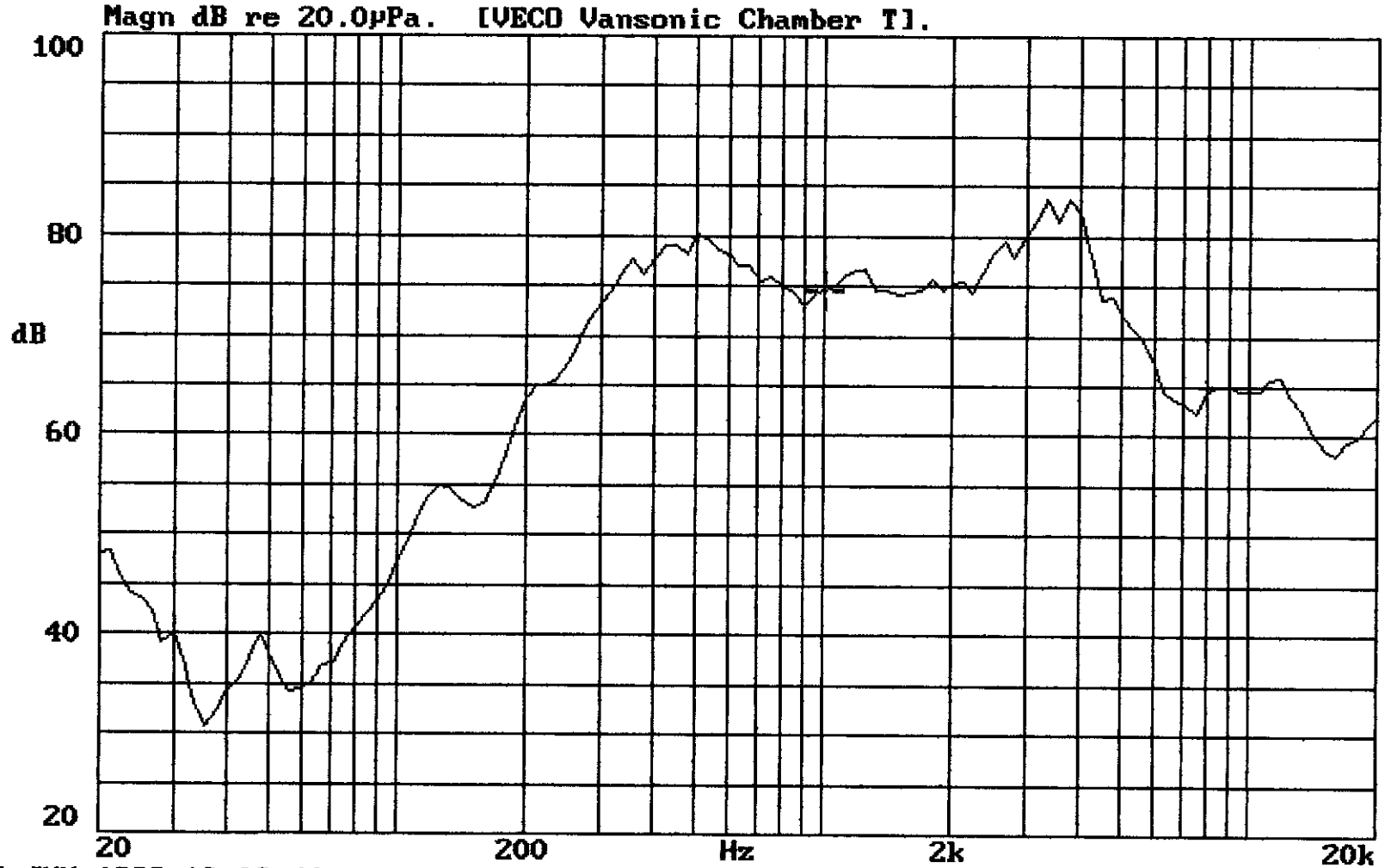

29-JUN-1999 13:03:41

Mode: SSR

VECO VANSONIC ENTERPRISE CO.,LTD.

ELITALIA

tel. 02.3361.1626 info@elitaliaweb.it
fax 02.2626.1009 www.elitaliaweb.it

1.	**MODEL:**	**36CS08FN** -M75NT(Clear Mylar) -M75ND(Black Mylar)
2.	Dimension	Outer Diameter **36** mm. Baffle Opening **32** mm.
		Height **Refer to Drawing** . Weight **7.5** Grams.
3.	Magnet	Materials **Rare Earth** . Size ∅ **12.5X 1.5** mm.
4	Nominal Lmpedance	**8** Ω ± **15** % At **1200** Hz.
5.	Power Rating	Normal **200** mW. Maximum **500** mW.
6.	Lowest Resonant Frequency	**530** ± **20** % Hz.
7.	Output Sound Pressure Lever	**82** ± **3** db / 0.2 Watt **.** 0.5 Meter.
	(S.P.L.)	Average at **800, 1000, 1200, 1500** Hz.
8.	Frequency Range	**350** ~ **6000** Hz. Average S P L - 10 db.
9.	Distortion	**5** % Maximum At **1000** Hz. **200** mW.
10.	Abnormal Sound Test	Must Be Normal Test By **1.3** Volts. Sine Wave.
11.	Load Test	White Noise With Weighted Filter **1.3** Volts.(RMS) **24** Hrs.
12.	Polarity	Diaphragm shall move Forward when Apply a Positive DC.
		Current to the "+" or "Marked" Terminal.

MOUNTING NOTICE

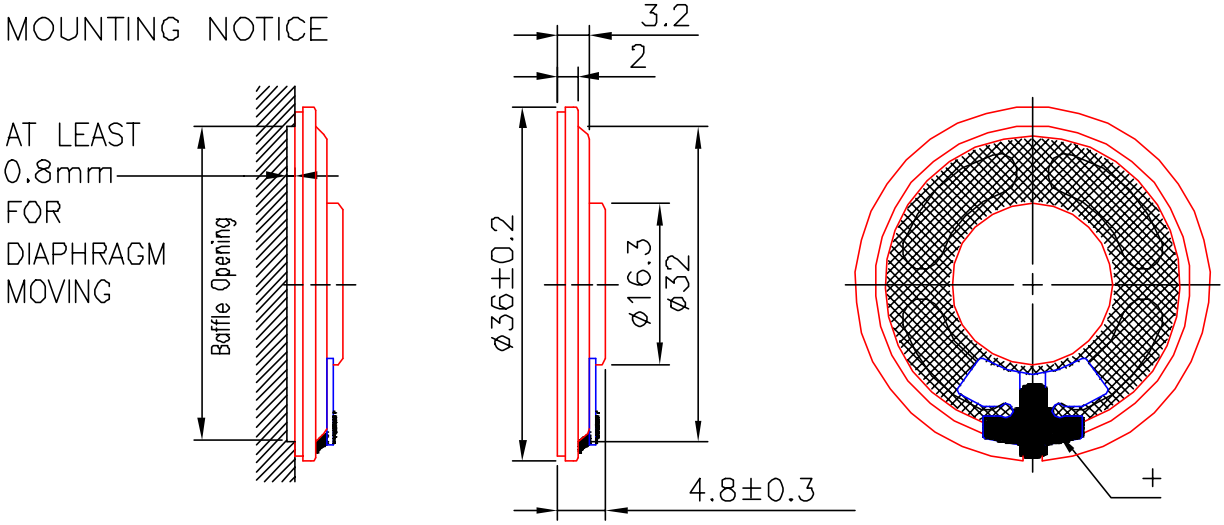

Unit : mm Housing Material : METAL

G:\\36\75N \36CS08FN.DWG J08

36CS08FN-M75NT Vol:1.265V(0.2W) Dis:0.5M VANSONIC
X:1.0000kHz *Y:82.86dB ZA:1.0000 SSR Fund.

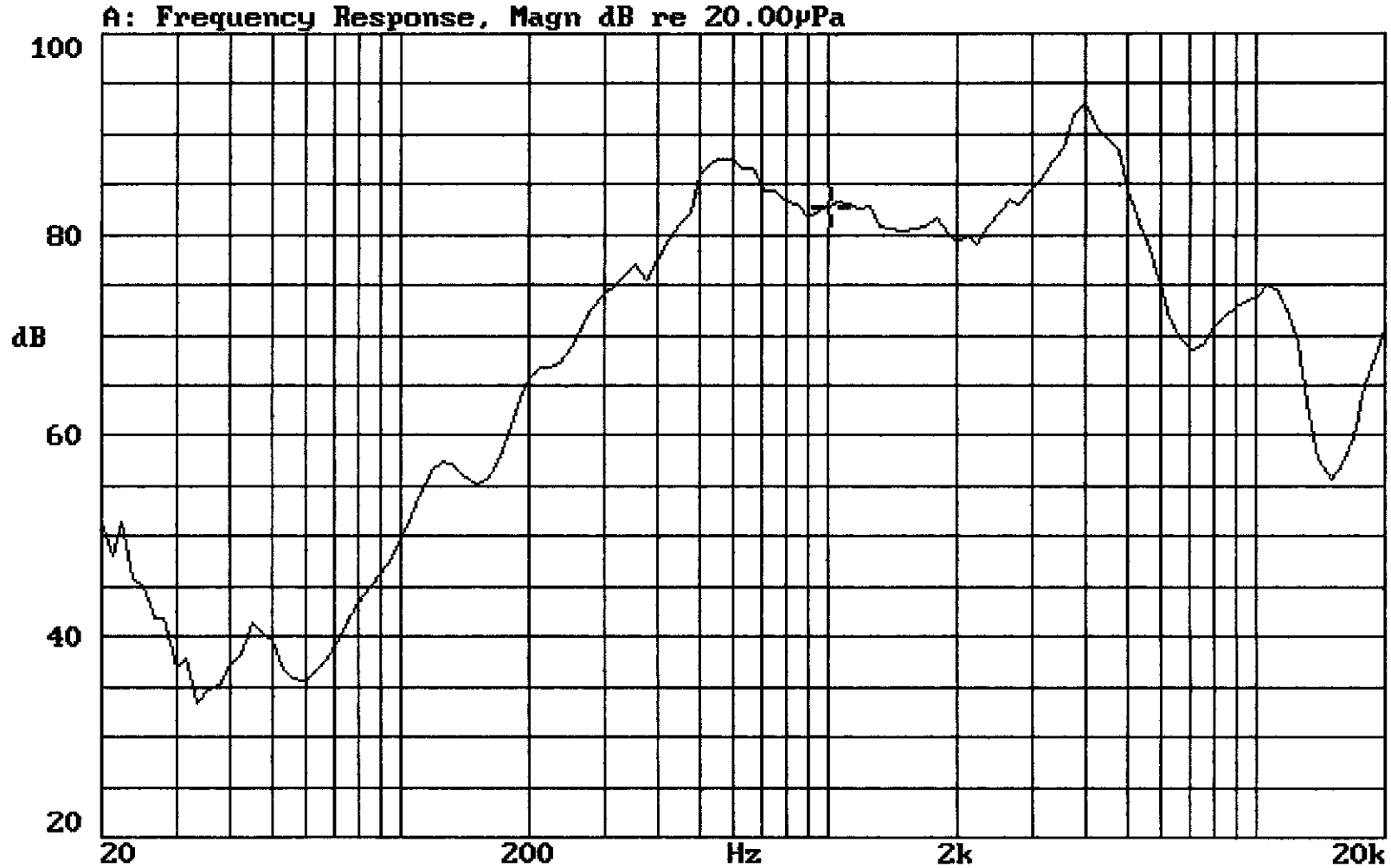

19-JUL-2001 11:12:14

Mode: SSR

VECO VANSONIC ENTERPRISE CO.,LTD.

ELITALIA
tel. 02.3361.1626 info@elitaliaweb.it
fax 02.2626.1009 www.elitaliaweb.it

1.	**MODEL:**	**36CS08FN** -M50NT(Clear Mylar) -M50ND(Black Mylar)
2.	Dimension	Outer Diameter **36** mm. Baffle Opening **32** mm.
		Height **Refer to Drawing** . Weight **7.5** Grams.
3.	Magnet	Materials **Rare Earth** . Size ∅ **12.5X 1.5** mm.
4	Nominal Lmpedance	**8** Ω ± **15** % At **1000** Hz.
5.	Power Rating	Normal **200** mW. Maximum **400** mW.
6.	Lowest Resonant Frequency	**500** ± **20** % Hz.
7.	Output Sound Pressure Lever	**84** ± **3** db / 0.2 Watt . 0.5 Meter.
	(S.P.L.)	Average at **600, 800, 1000, 1200** Hz.
8.	Frequency Range	**300** ~ **5000** Hz. Average S P L - 10 db.
9.	Distortion	**5** % Maximum At **1000** Hz. **200** mW.
10.	Abnormal Sound Test	Must Be Normal Test By **1.3** Volts. Sine Wave.
11.	Load Test	White Noise With Weighted Filter **1.3** Volts.(RMS) **24** Hrs.
12.	Polarity	Diaphragm shall move Forward when Apply a Positive DC.
		Current to the "+" or "Marked" Terminal.

MOUNTING NOTICE

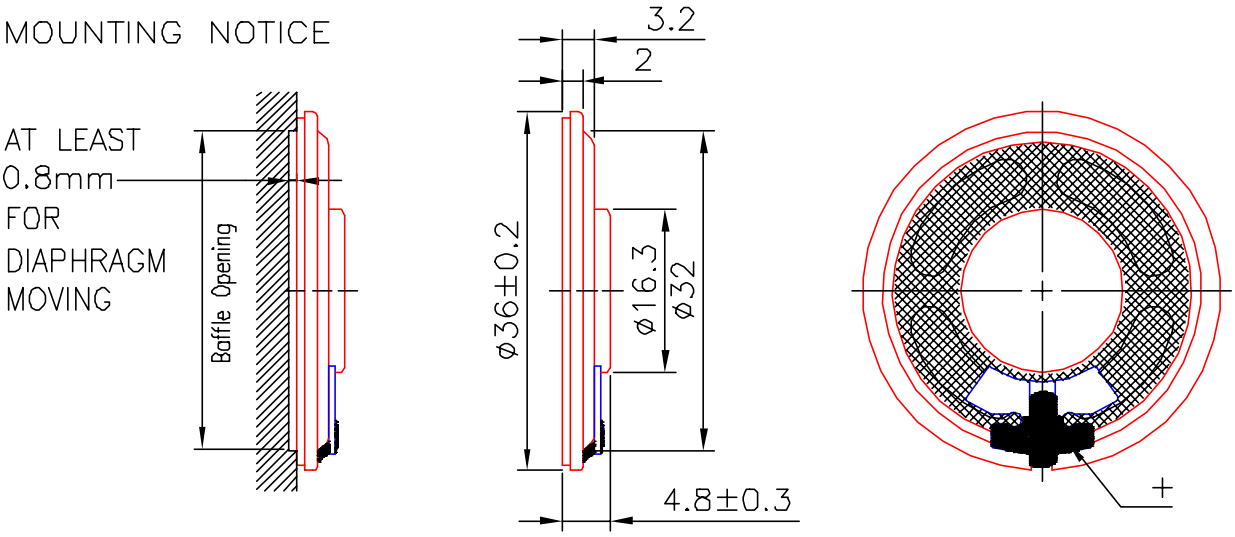

Unit : mm Housing Material : METAL

G:\36CF\50N\36CS08F.DWG J08

36CS08FN-M50NT VOL:1.265V(0.2W) DIS:0.5M VANSONIC
X:1.0000kHz *Y:84.43dB ZA:1.0000 SSR Fund.

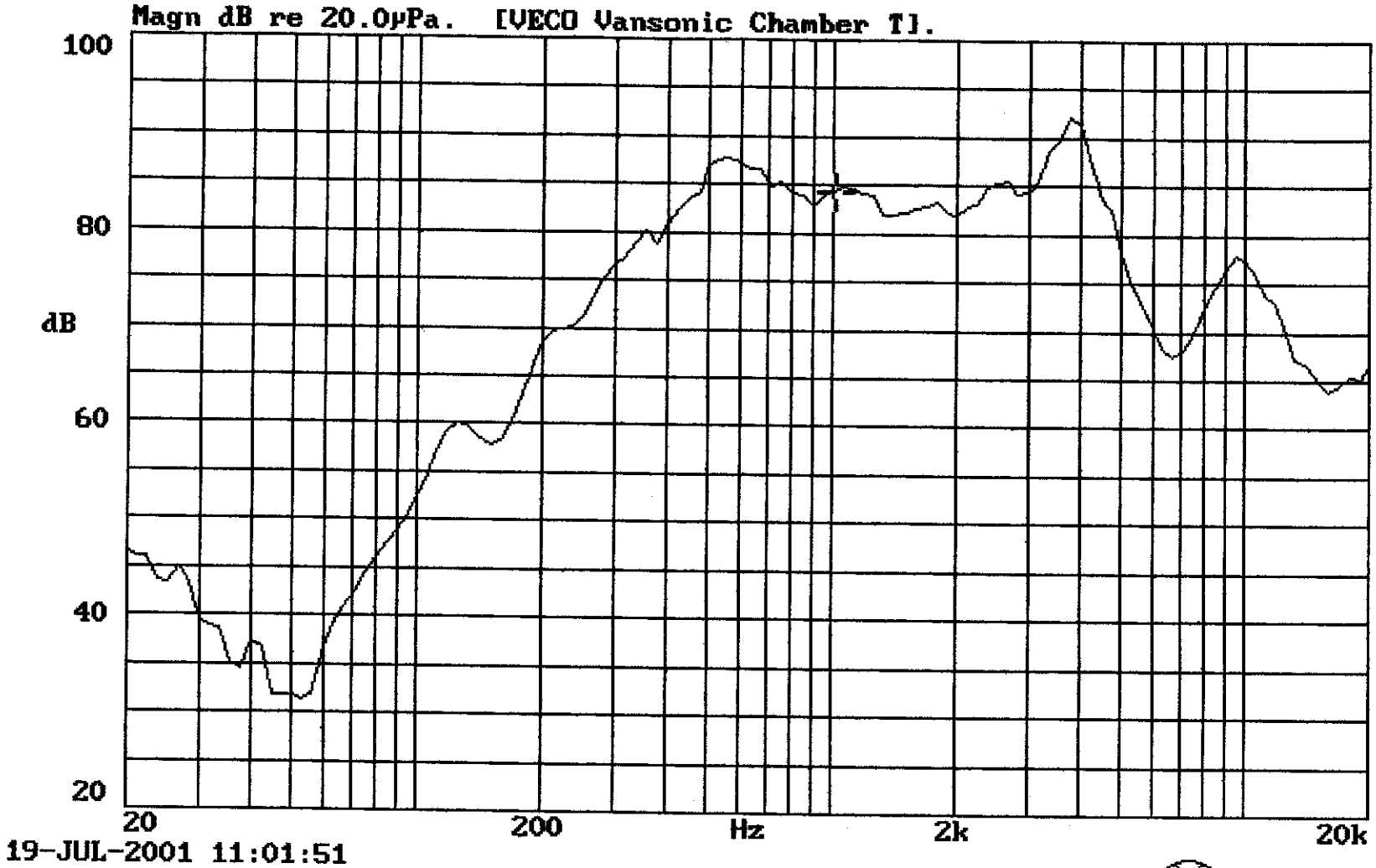

19-JUL-2001 11:01:51

Mode: SSR

VECO VANSONIC ENTERPRISE CO.,LTD.

ELITALIA

tel. 02.3361.1626 info@elitaliaweb.it
fax 02.2626.1009 www.elitaliaweb.it

1.	**MODEL:**	**36CS08FN** -M50BD(Black Mylar)-M50BT(Clear Mylar)
2.	Dimension	Outer Diameter **36** mm. Baffle Opening **32** mm.
		Height **Refer to Drawing**. Weight **7.5** Grams.
3.	Magnet	Materials **Rare Earth** . Size ø **12.5X 1.5** mm.
4	Nominal Lmpedance	**8** Ω ± **15** % At **1000** Hz.
5.	Power Rating	Normal **500** mW. Maximum **1000** mW.
6.	Lowest Resonant Frequency	**550** ± **20** % Hz.
7.	Output Sound Pressure Lever	**87** ± **3** db / 0.5 Watt **.** 0.5 Meter.
	(S.P.L.)	Average at **600, 800, 1000, 1200** Hz.
8.	Frequency Range	**300** ~ **6000** Hz. Average S P L - 10 db.
9.	Distortion	**5** % Maximum At **1000** Hz. **500** mW.
10.	Abnormal Sound Test	Must Be Normal Test By **2.0** Volts. Sine Wave.
11.	Load Test	White Noise With Weighted Filter **2.0** Volts.(RMS) **24** Hrs.
12.	Polarity	Diaphragm shall move Forward when Apply a Positive DC.
		Current to the "+" or "Marked" Terminal.

MOUNTING NOTICE

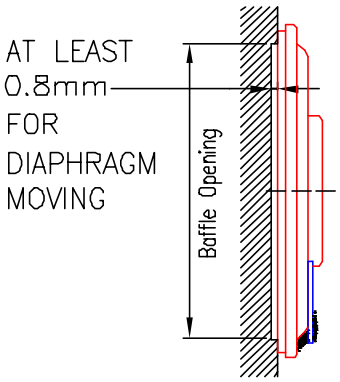

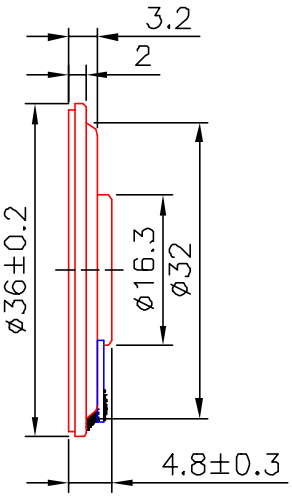

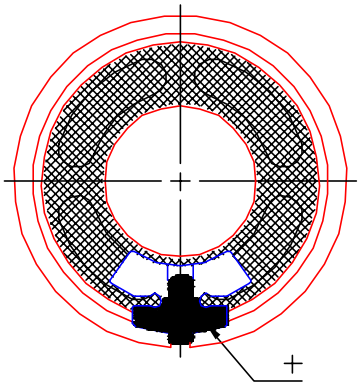

Unit : mm Housing Material : METAL

G:\36\50b\36CS08FN.DWG J08

36CS08FN-M50BD Vol:2.0V(0.5W) Dis:0.5M VANSONIC
X:1.0000kHz *Y:86.18dB ZA:1.0000 SSR Fund.

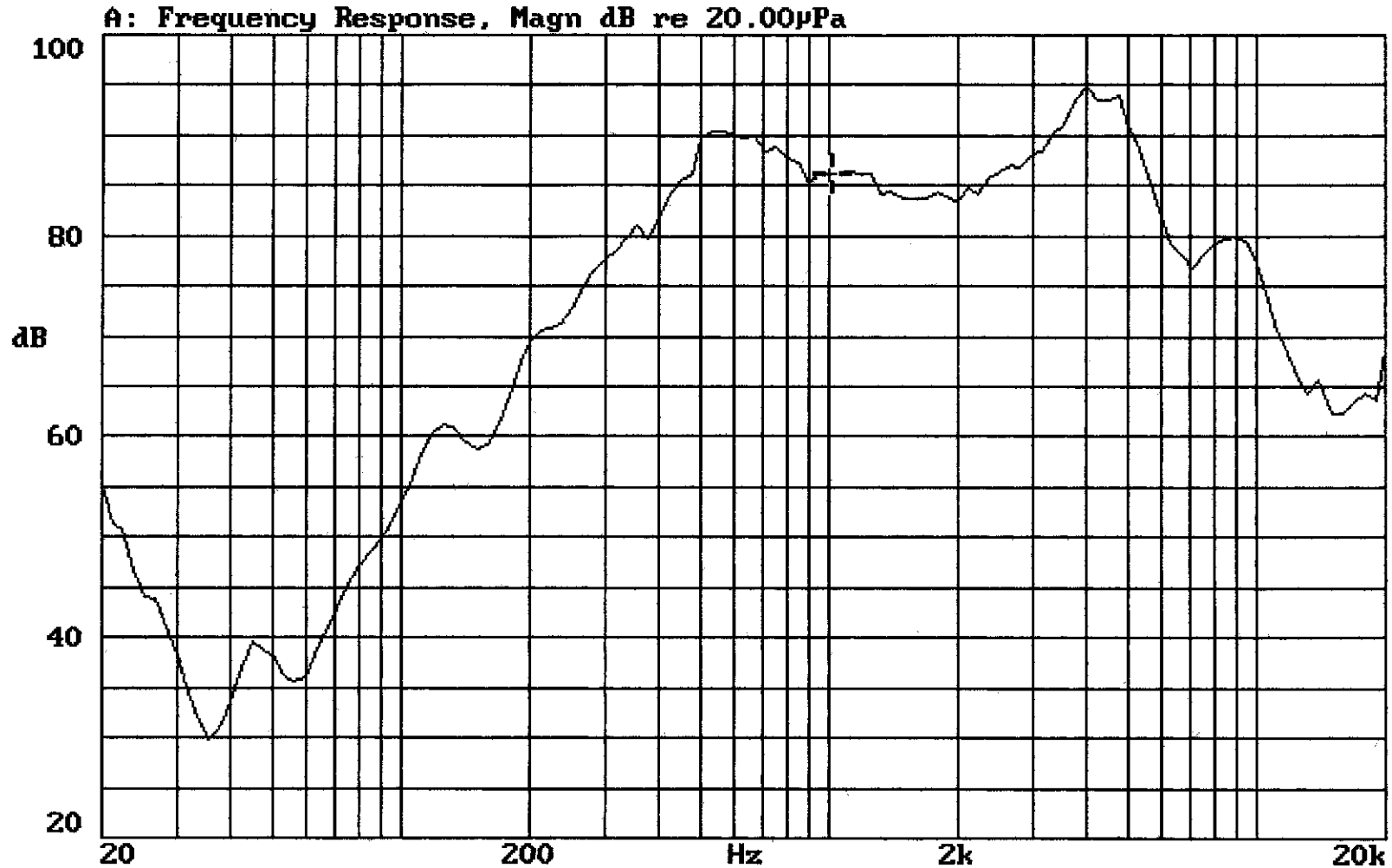

13-APR-2001 09:05:11

Mode: SPEAKER

VECO VANSONIC ENTERPRISE CO.,LTD.

ELITALIA

tel. 02.3361.1626 info@elitaliaweb.it
fax 02.2626.1009 www.elitaliaweb.it

1.	**MODEL:**	**36CS08FN-3** -I50BD(Resistant High Temperature)
2.	Dimension	Outer Diameter **36** mm. Baffle Opening **32** mm.
		Height **Refer to Drawing** . Weight **8.0** Grams.
3.	Magent	Materials **Rare Earth** . Size ø **12.5x1.5** mm.
4	Nominal Lmpedance	**8** Ω ± **15** % At **1500** Hz.
5.	Power Rating	Normal **1** W. Maximum **1.5** W.
6.	Lowest Resonant Frequency	**570** ± **20** % Hz.
7.	Output Sound Pressure Lever	**92** ± **3** db / 1 Watt . 0.5 Meter.
	(S.P.L.)	Average at **800, 1000, 1200, 1500** Hz.
8.	Frequency Range	**300** ~ **5000** Hz. Average S P L - 10 db.
9.	Distortion	**5** % Maximum At **1000** Hz. **1** W.
10.	Abnormal Sound Test	Must Be Normal Test By **2.9** Volts. Sine Wave.
11.	Load Test	White Noise With Weighted Filter **2.9** Volts.(RMS) **96** Hrs.
12.	Storage Temperature	**- 40°C ~ + 90°C**
13.	Operating Temperature	**- 40°C ~ + 85°C**
14.	Polarity	Diaphragm shall move Forward when Apply a Positive DC.
		Current to the "+" or "Marked" Terminal.

MOUNTING NOTICE

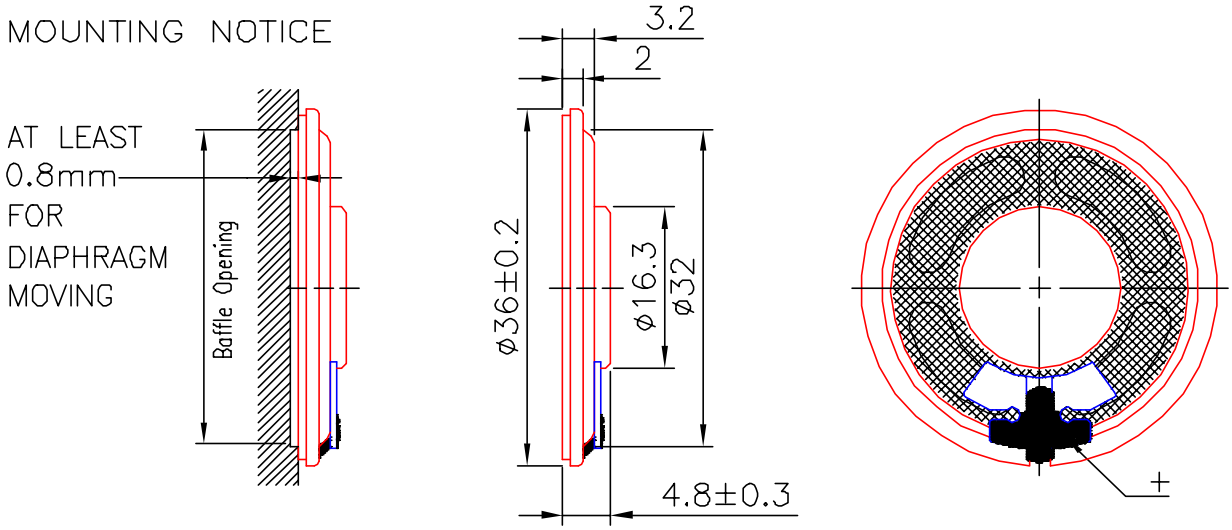

Unit : mm Housing Material : METAL

F:\\SPEC\THIN\36CS\36CS08FN-3-I50BD.DWG M01

36CS08FN-3-I50BD VOL:2.828V(1W) DIS:0.5M VANSONIC
X:1.0000kHz *Y:93.45dB ZA:Live Curve SSR Fund.

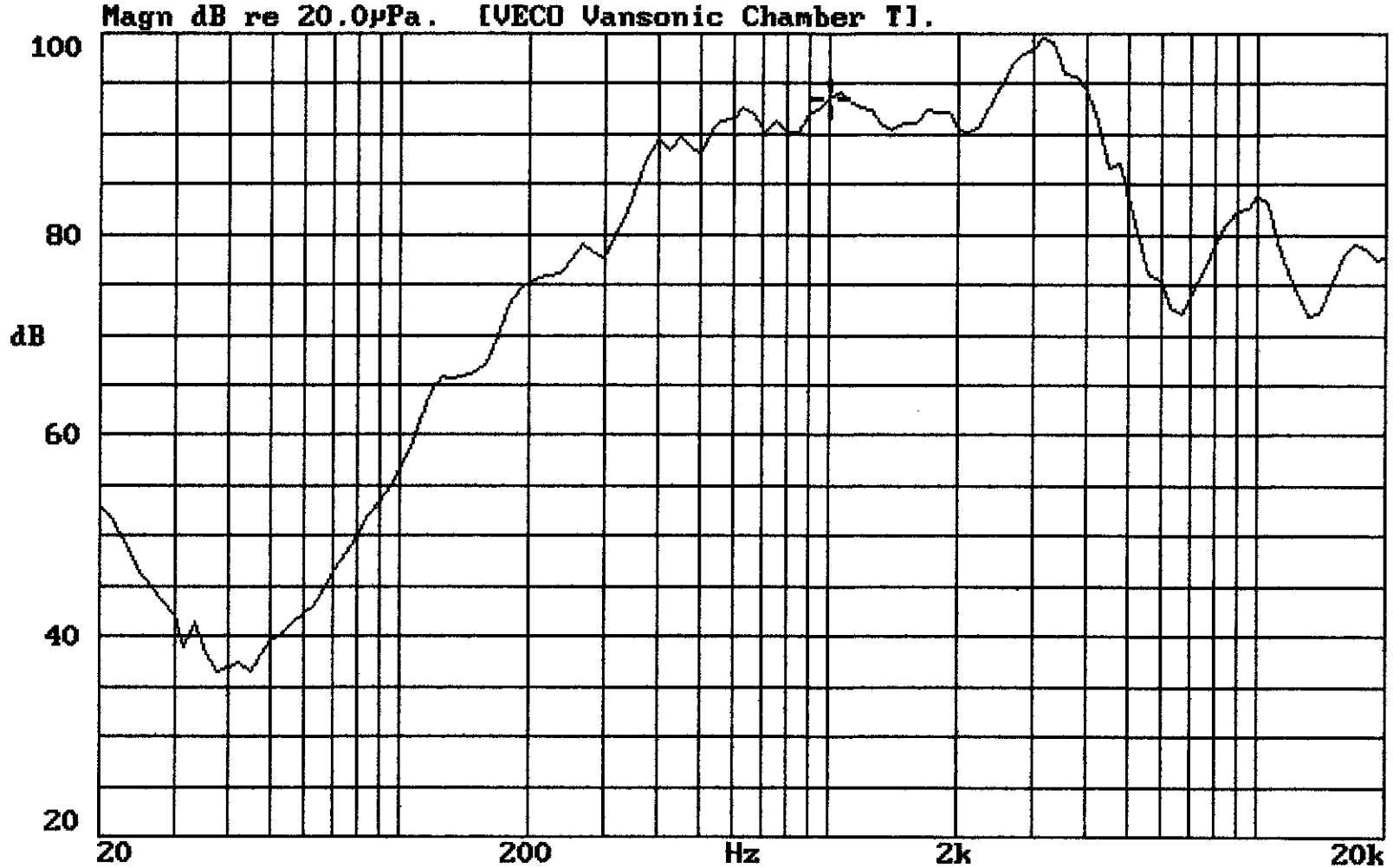

24-JAN-2002 12:59:09

Mode: SPEAKER

VECO VANSONIC ENTERPRISE CO.,LTD.

ELITALIA

tel. 02.3361.1626 info@elitaliaweb.it
fax 02.2626.1009 www.elitaliaweb.it

1.	**MODEL:**	**36CS08FN-1** -M75NT(Clear Mylar)-M75ND(Black Mylar)
2.	Dimension	Outer Diameter **36** mm. Baffle Opening **32** mm.
		Height **Refer to Drawing** . Weight **7.5** Grams.
3.	Magnet	Materials **Rare Earth** . Size ∅ **12.5X 1.5** mm.
4	Nominal Lmpedance	**8** Ω ± **15** % At **1000** Hz.
5.	Power Rating	Normal **500** mW. Maximum **1000** mW.
6.	Lowest Resonant Frequency	**600** ± **20** % Hz.
7.	Output Sound Pressure Lever	**88** ± **3** db / 0.5 Watt . 0.5 Meter.
	(S.P.L.)	Average at **600, 800, 1000, 1200** Hz.
8.	Frequency Range	**400** ~ **6500** Hz. Average S P L - 10 db.
9.	Distortion	**5** % Maximum At **1000** Hz. **500** mW.
10.	Abnormal Sound Test	Must Be Normal Test By **2.0** Volts. Sine Wave.
11.	Load Test	White Noise With Weighted Filter **2.0** Volts.(RMS) **24** Hrs.
12.	Polarity	Diaphragm shall move Forward when Apply a Positive DC.
		Current to the "+" or "Marked" Terminal.

MOUNTING NOTICE

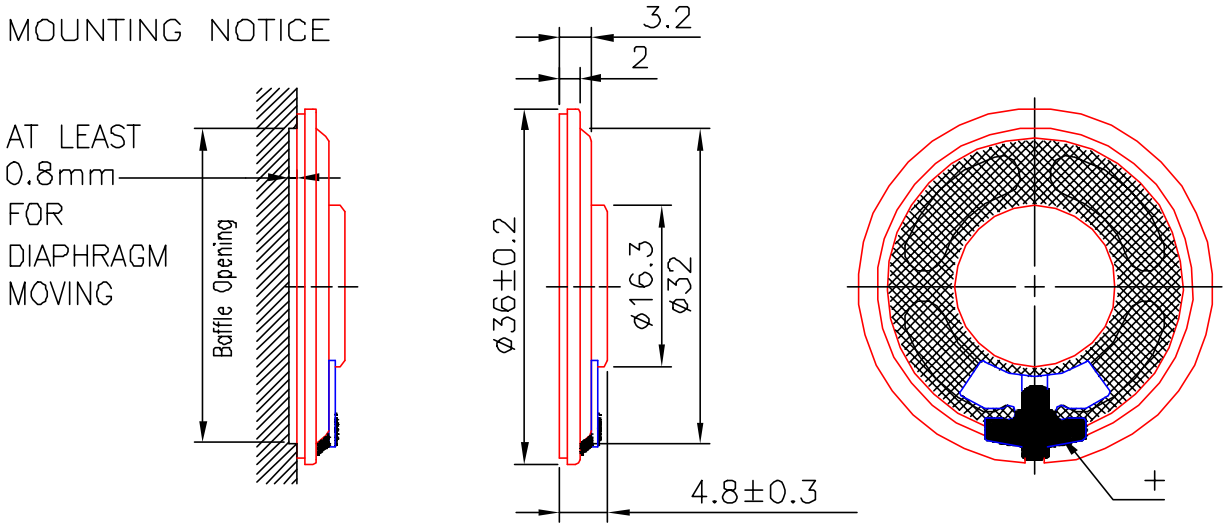

Unit : mm Housing Material : METAL

G:\\36\75ND\36CS08FN-1.DWG J08

36CS08FN-1-M75ND VOL:2.0V(0.5W) DIS:0.5M VANSONIC
X:1.0000kHz *Y:86.40dB ZA:1.0000 SSR Fund.

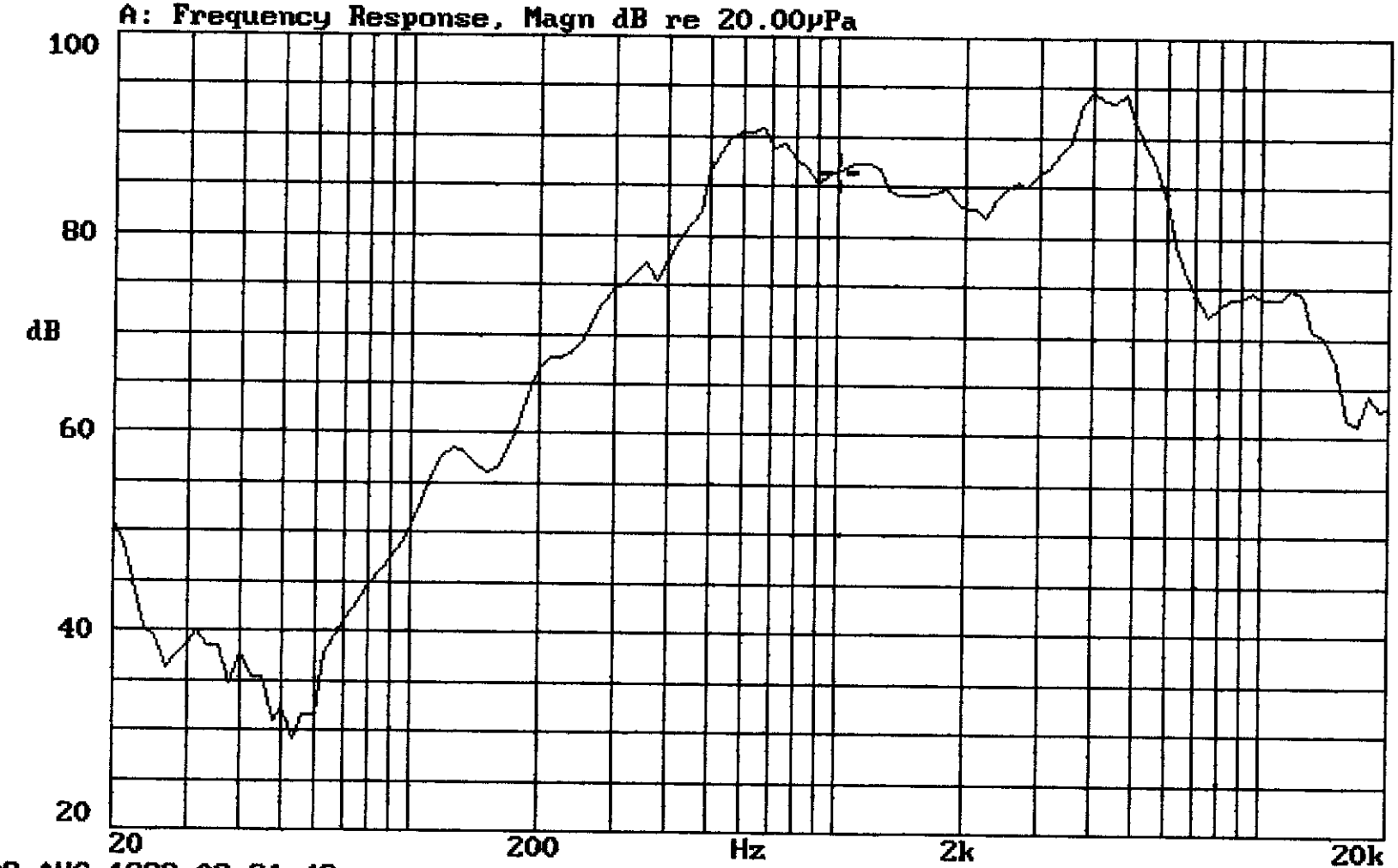

09-AUG-1999 08:31:43

Mode: AMPCAL

VECO VANSONIC ENTERPRISE CO.,LTD.

ELITALIA

tel. 02.3361.1626 info@elitaliaweb.it
fax 02.2626.1009 www.elitaliaweb.it

1.	**MODEL:**	**38CS08G** -M50NT(Clear Mylar) -M50ND(Black Mylar)
2.	Dimension	Outer Diameter **38** mm. Baffle Opening **36.2** mm.
		Height **Refer to Drawing** . Weight **5.8** Grams.
3.	Magnet	Materials **Rare Earth** . Size ø **12.5X 1.5** mm.
4	Nominal Lmpedance	**50** Ω ± **15** % At **1000** Hz.
5.	Power Rating	Normal **200** mW. Maximum **400** mW.
6.	Lowest Resonant Frequency	**500** ± **20** % Hz.
7.	Output Sound Pressure Lever	**80** ± **3** db / 0.2 Watt **.** 0.5 Meter.
	(S.P.L.)	Average at **800, 1000, 1200, 1500** Hz.
8.	Frequency Range	**300** ~ **6500** Hz. Average S P L - 10 db.
9.	Distortion	**5** % Maximum At **1000** Hz. **200** mW.
10.	Abnormal Sound Test	Must Be Normal Test By **1.3** Volts. Sine Wave.
11.	Load Test	White Noise With Weighted Filter **1.3** Volts.(RMS) **24** Hrs.
12.	Polarity	Diaphragm shall move Forward when Apply a Positive DC.
		Current to the "+" or "Marked" Terminal.

MOUNTING NOTICE

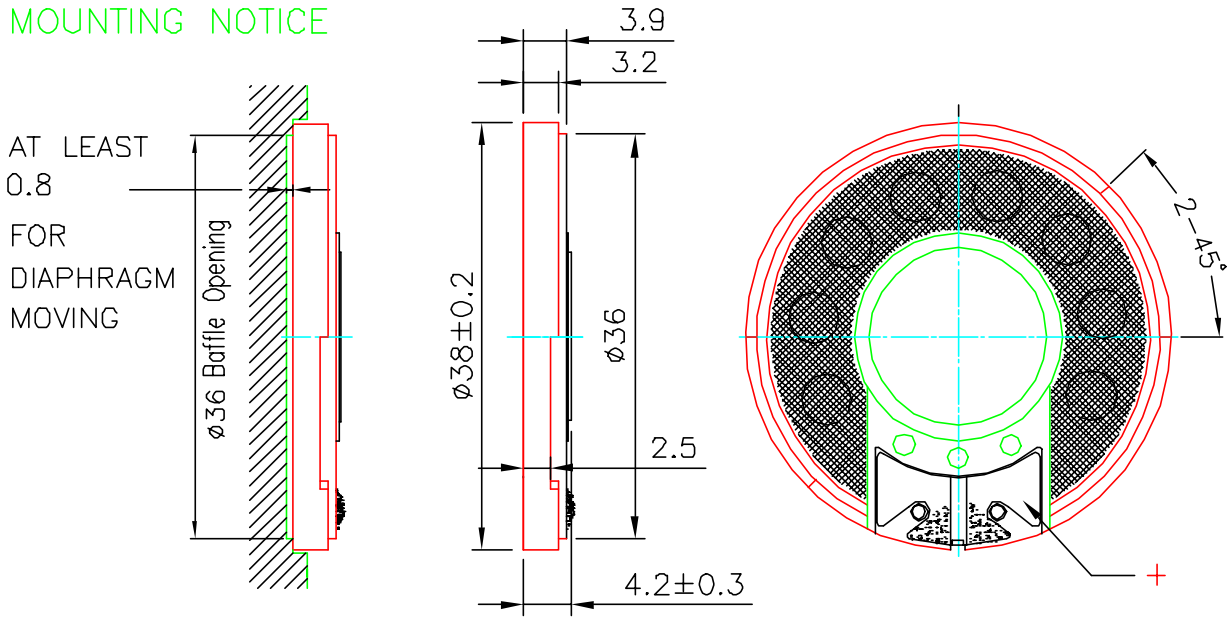

Unit : mm Housing Material : ABS

G:\\THIN\38CG\38CS08G.DWG J08

38CS08G-M50ND Vol:1.265(0.2W) Dis:0.5M VANSONIC
X:1.0000kHz *Y:78.75dB ZA:1.0000 SSR Fund.

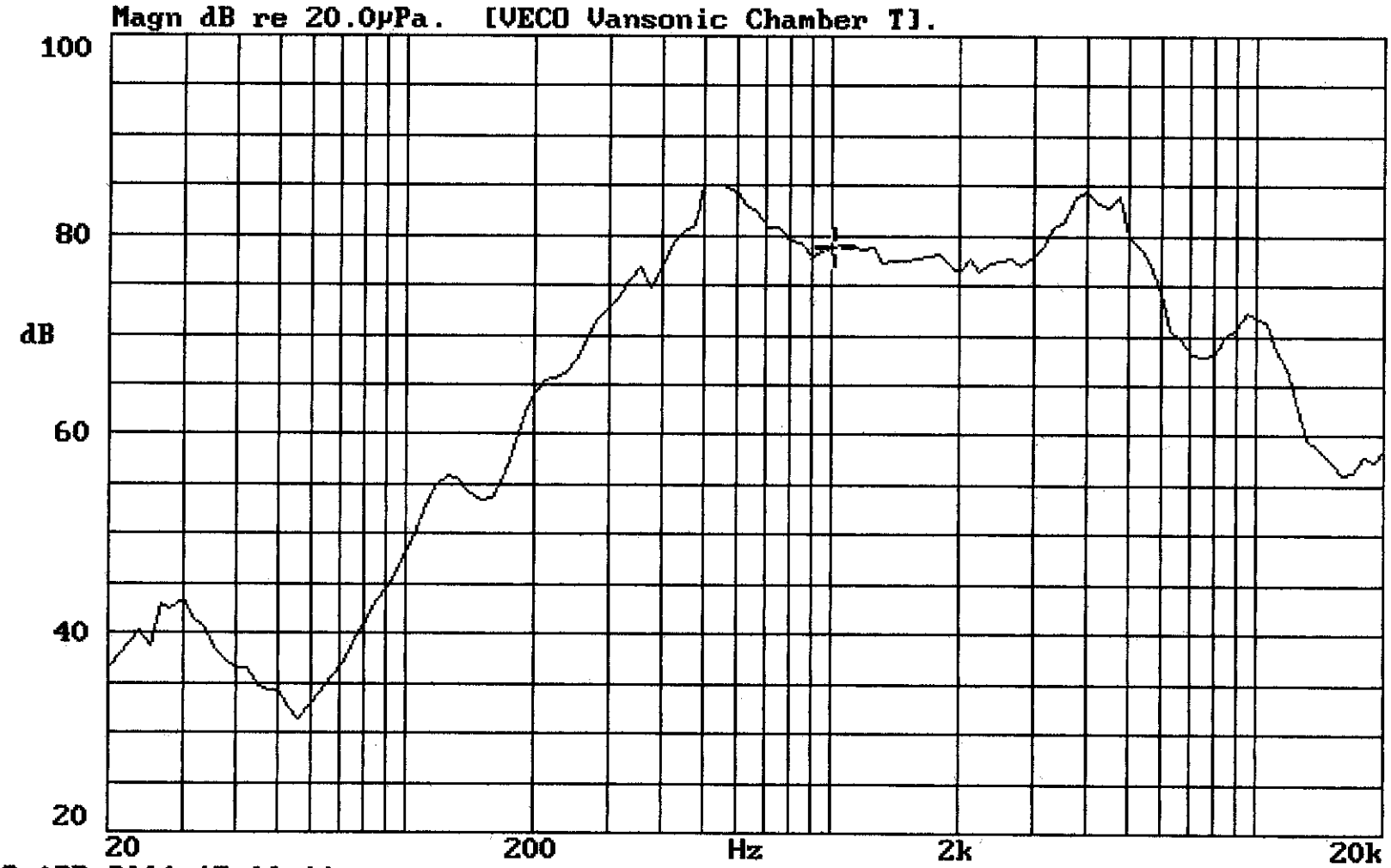

09-APR-2001 17:00:11

Mode: SSR

VECO VANSONIC ENTERPRISE CO.,LTD.

ELITALIA

tel. 02.3361.1626 info@elitaliaweb.it
fax 02.2626.1009 www.elitaliaweb.it

1.	**MODEL:**	**38CS08G-3-M50ND** (Black Mylar)
2.	Dimension	Outer Diameter **38** mm. Baffle Opening **36.2** mm.
		Height **Refer to Drawing** . Weight **6** Grams.
3.	Magnet	Materials **Rare Earth** . Size ø **12.5X 1.5** mm.
4	Nominal Lmpedance	**8** Ω ± **15** % At **1000** Hz.
5.	Power Rating	Normal **300** mW. Maximum **600** mW.
6.	Lowest Resonant Frequency	**330** ± **20** % Hz.
7.	Output Sound Pressure Lever	**80** ± **3** db / 0.3 Watt . 0.5 Meter.
	(S.P.L.)	Average at **800, 1000, 1200, 1500** Hz.
8.	Frequency Range	**150** ~ **5000** Hz. Average S P L - 10 db.
9.	Distortion	**5** % Maximum At **1000** Hz. **300** mW.
10.	Abnormal Sound Test	Must Be Normal Test By **1.6** Volts. Sine Wave.
11.	Load Test	White Noise With Weighted Filter **1.6** Volts.(RMS) **24** Hrs.
12.	Polarity	Diaphragm shall move Forward when Apply a Positive DC.
		Current to the "+" or "Marked" Terminal.

MOUNTING NOTICE

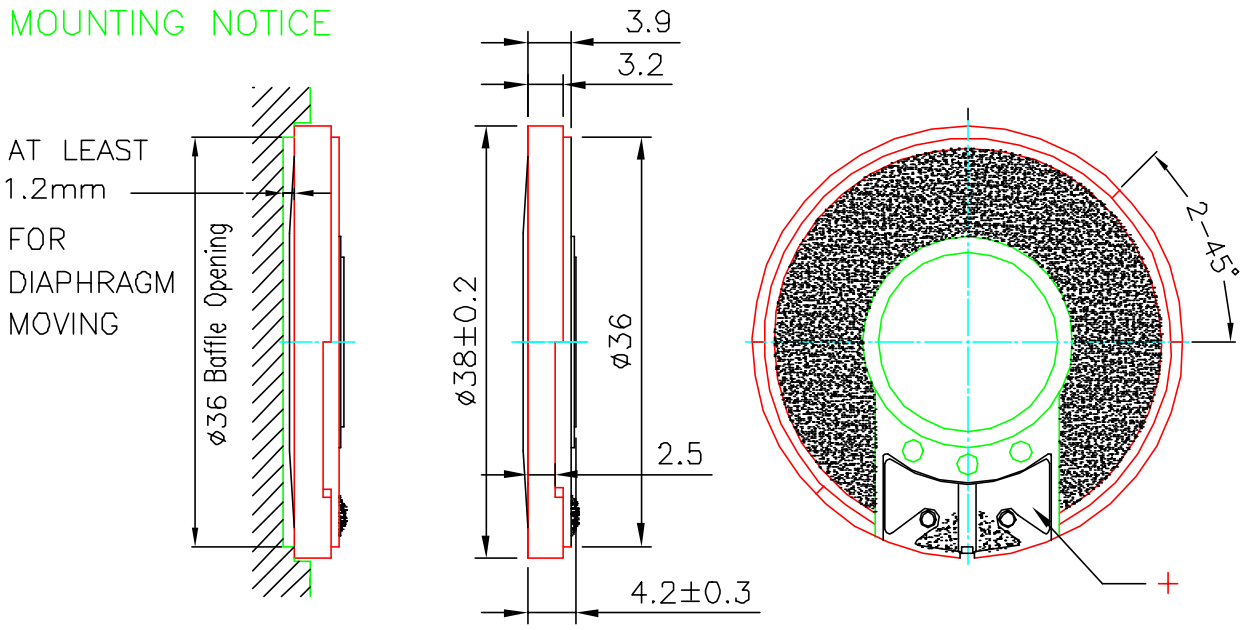

Unit : mm Housing Material : ABS

G:\\THIN\38CG\38CS08G-3-M50ND.DWG K11

38CS08G-3-M50ND VOL:1.549V(0.3W) DIS:0.5M VANSONIC
X:1.0000kHz *Y:81.17dB ZA:1.0000 SSR Fund.

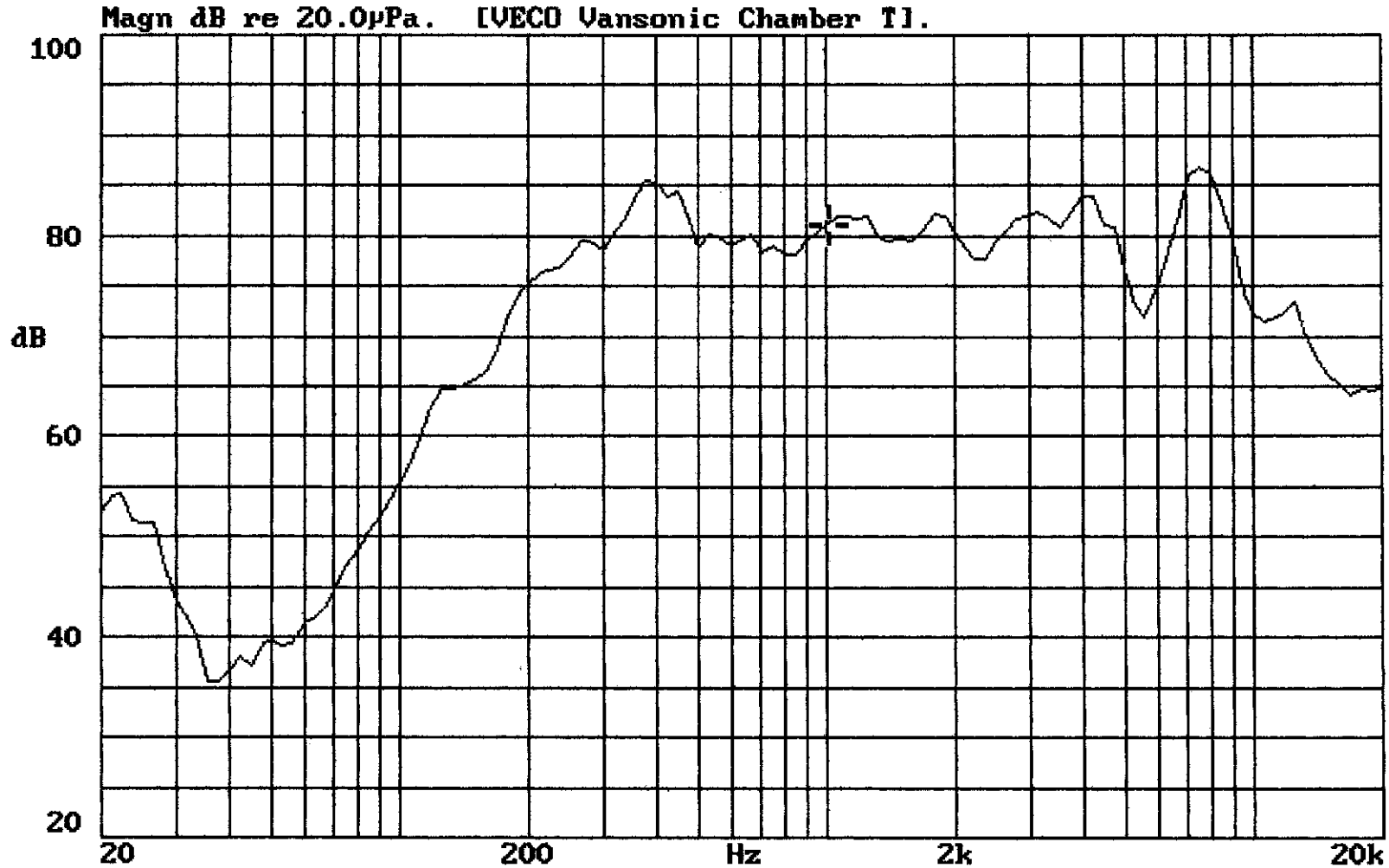

13-FEB-2001 15:49:06

Mode: SSR

VECO VANSONIC ENTERPRISE CO.,LTD.

ELITALIA

tel. 02.3361.1626 info@elitaliaweb.it
fax 02.2626.1009 www.elitaliaweb.it

1.	**MODEL:**	**38CS08G-2-M50ND** (Black Mylar)
2.	Dimension	Outer Diameter **38** mm. Baffle Opening **36.2** mm.
		Height **Refer to Drawing** . Weight **6** Grams.
3.	Magnet	Materials **Rare Earth** . Size ø **12.5X 1.5** mm.
4	Nominal Lmpedance	**8** Ω ± **15** % At **1000** Hz.
5.	Power Rating	Normal **300** mW. Maximum **600** mW.
6.	Lowest Resonant Frequency	**330** ± **20** % Hz.
7.	Output Sound Pressure Lever	**80** ± **3** db / 0.3 Watt . 0.5 Meter.
	(S.P.L.)	Average at **800, 1000, 1200, 1500** Hz.
8.	Frequency Range	**150** ~ **5000** Hz. Average S P L - 10 db.
9.	Distortion	**5** % Maximum At **1000** Hz. **300** mW.
10.	Abnormal Sound Test	Must Be Normal Test By **1.6** Volts. Sine Wave.
11.	Load Test	White Noise With Weighted Filter **1.6** Volts.(RMS) **24** Hrs.
12.	Polarity	Diaphragm shall move Forward when Apply a Positive DC.
		Current to the "+" or "Marked" Terminal.

MOUNTING NOTICE

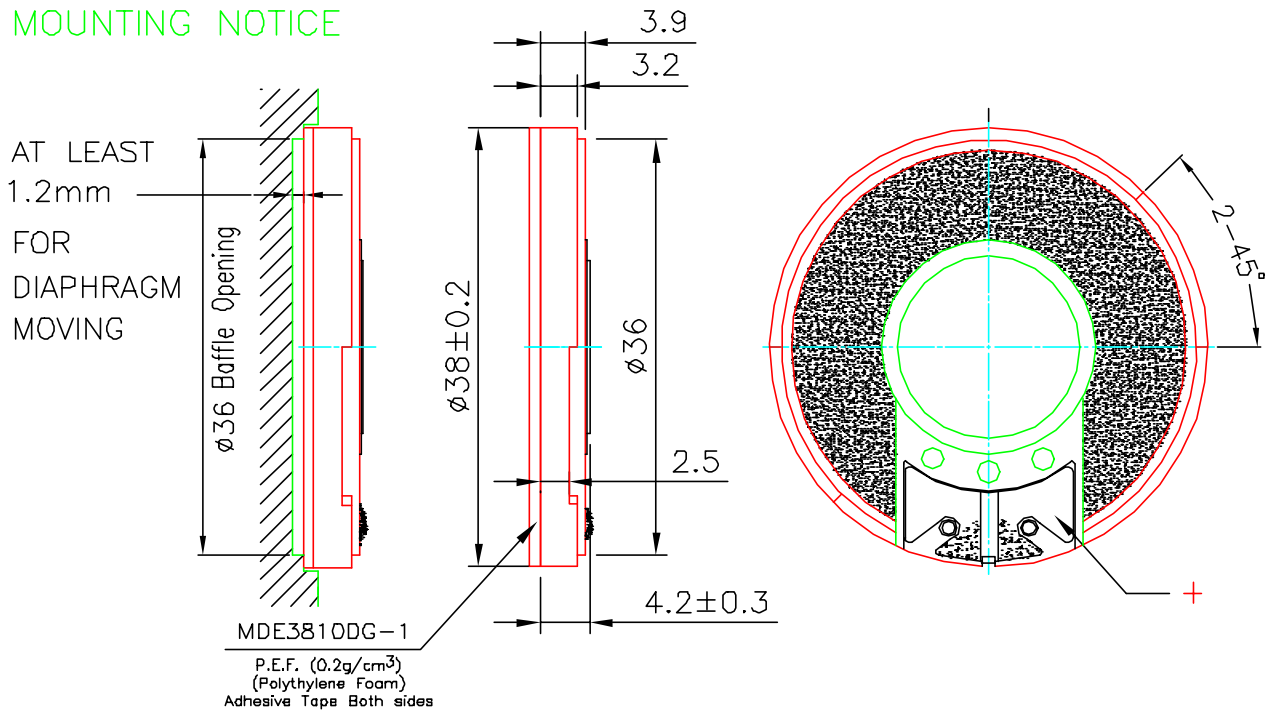

Unit : mm Housing Material : ABS

G:\THIN\38CG\38CS08G-2-M50ND.DWG L11

38CS08G-2-M50ND VOL:1.549V(0.3W) DIS:0.5M VANSONIC
X:1.0000kHz *Y:81.17dB ZA:1.0000 SSR Fund.

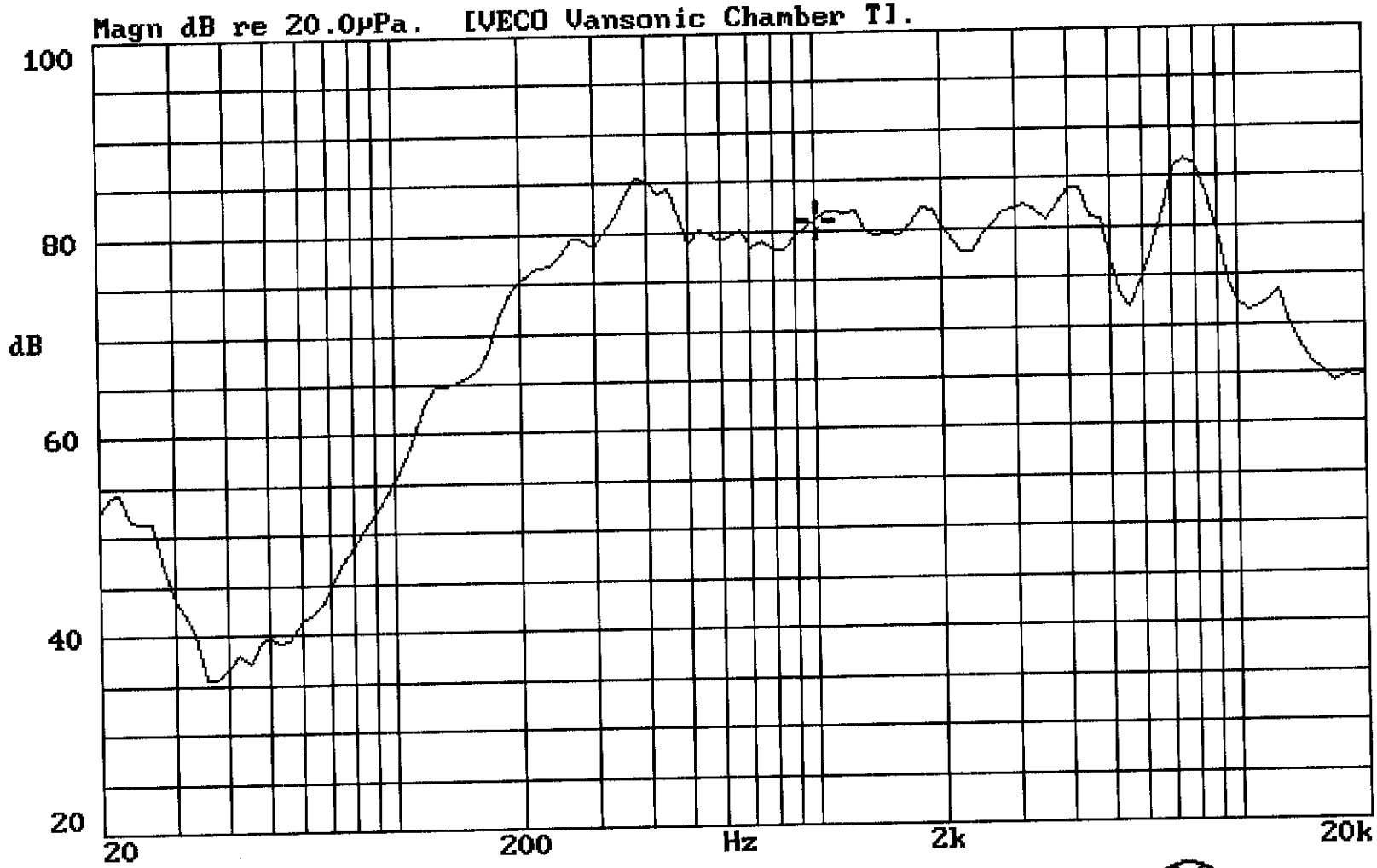

19-NOV-2001 17:43:48

Mode: SSR

VECO VANSONIC ENTERPRISE CO.,LTD.

ELITALIA

tel. 02.3361.1626 info@elitaliaweb.it
fax 02.2626.1009 www.elitaliaweb.it

1.	**MODEL:**	**38CS08G-1-M50ND** (Black Mylar)
2.	Dimension	Outer Diameter **38** mm. Baffle Opening **36.2** mm.
		Height **Refer to Drawing** . Weight **6** Grams.
3.	Magnet	Materials **Rare Earth** . Size ø **12.5X 1.5** mm.
4	Nominal Lmpedance	**8** Ω ± **15** % At **1000** Hz.
5.	Power Rating	Normal **300** mW. Maximum **600** mW.
6.	Lowest Resonant Frequency	**330** ± **20** % Hz.
7.	Output Sound Pressure Lever	**80** ± **3** db / 0.3 Watt . 0.5 Meter.
	(S.P.L.)	Average at **800, 1000, 1200, 1500** Hz.
8.	Frequency Range	**150** ~ **5000** Hz. Average S P L - 10 db.
9.	Distortion	**5** % Maximum At **1000** Hz. **300** mW.
10.	Abnormal Sound Test	Must Be Normal Test By **1.6** Volts. Sine Wave.
11.	Load Test	White Noise With Weighted Filter **1.6** Volts.(RMS) **24** Hrs.
12.	Polarity	Diaphragm shall move Forward when Apply a Positive DC.
		Current to the "+" or "Marked" Terminal.

MOUNTING NOTICE

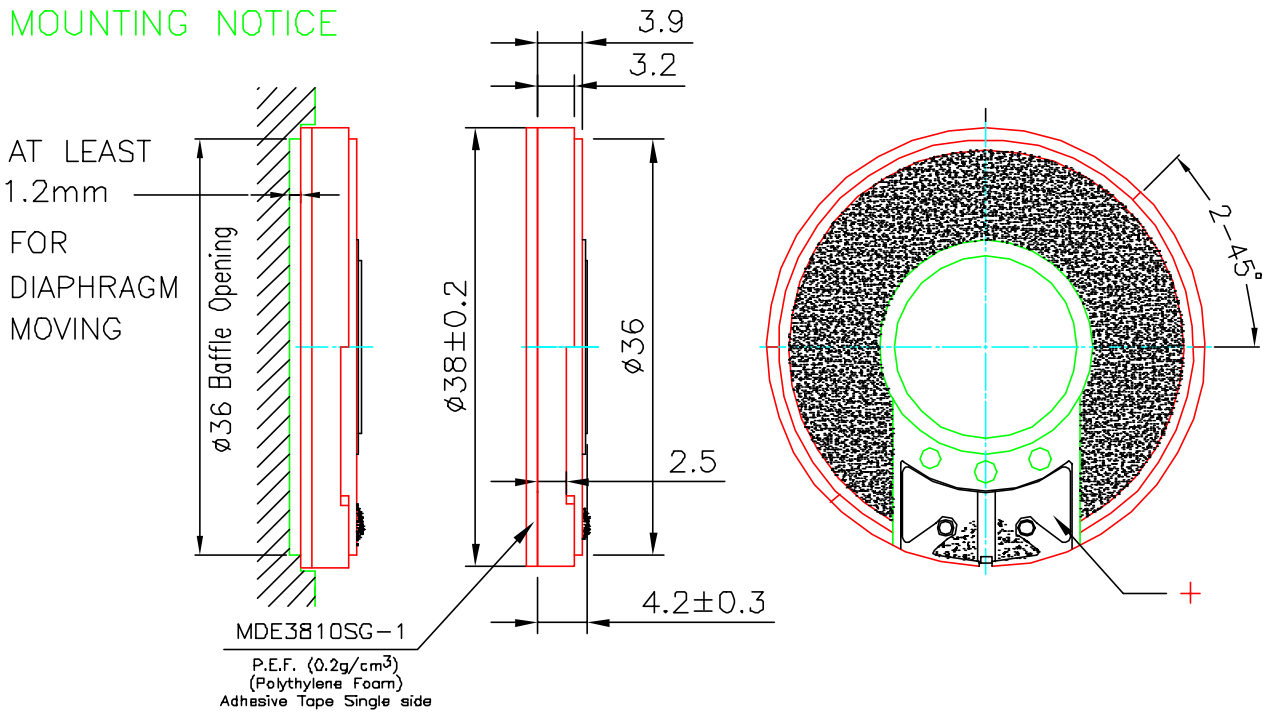

Unit : mm Housing Material : ABS

G:\THIN\38CG\38CS08G-1-M50ND-A.DWG K11

38CS08G-1-M50ND VOL:1.549V(0.3W) DIS:0.5M VANSONIC
X:1.0000kHz *Y:81.17dB ZA:Live Curve SSR Fund.

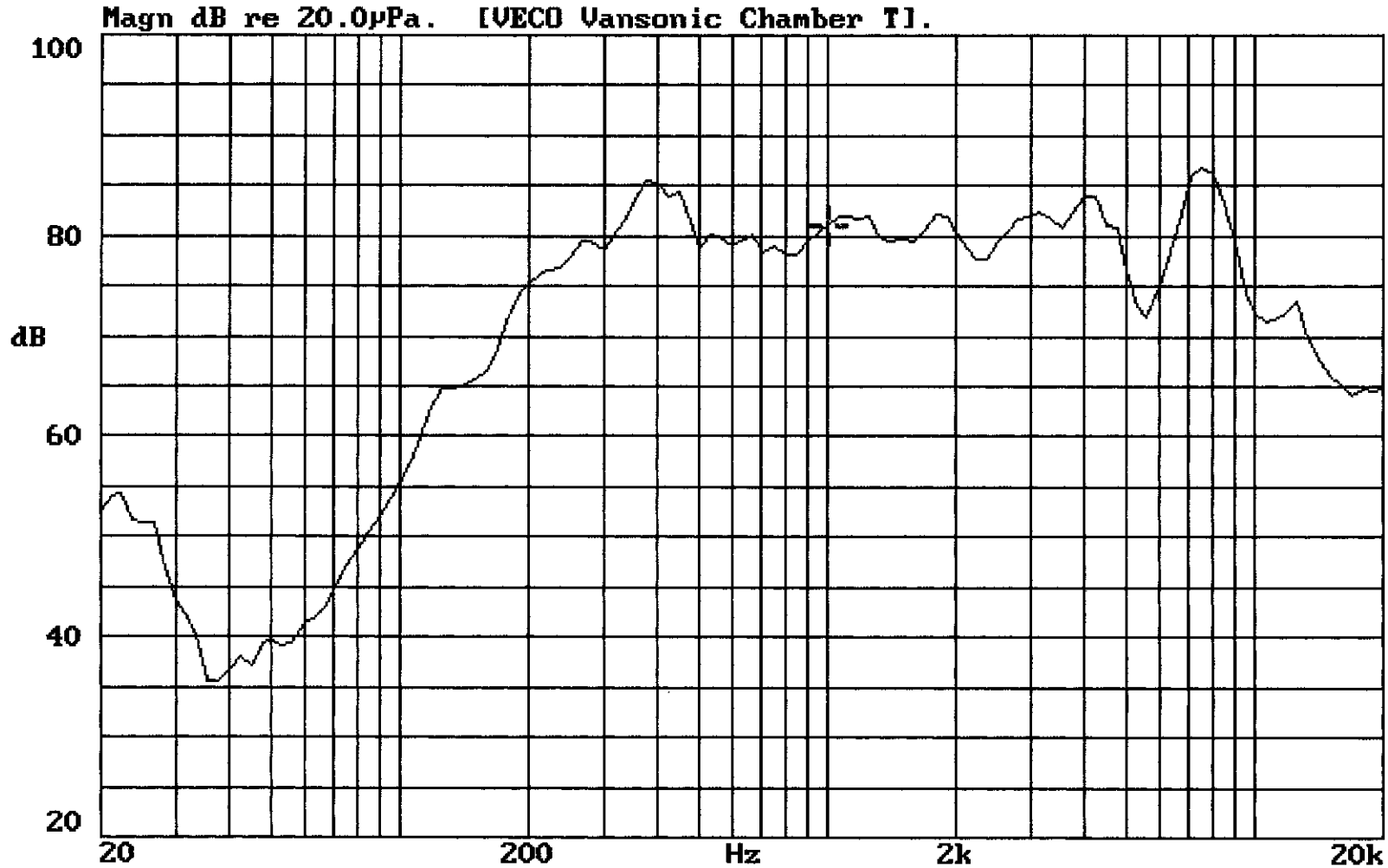

13-NOV-2000 11:34:39

Mode: SPEAKER

VECO VANSONIC ENTERPRISE CO.,LTD.

ELITALIA

tel. 02.3361.1626 info@elitaliaweb.it
fax 02.2626.1009 www.elitaliaweb.it

1.	**MODEL:**	**38CR08G-M75ND** (Black Mylar)
2.	Dimension	Outer Diameter **38** mm. Baffle Opening **36.2** mm.
		Height **Refer to Drawing** . Weight **6** Grams.
3.	Magnet	Materials **Rare Earth** . Size ø **12.5X 1.5** mm.
4	Nominal Lmpedance	**8** Ω ± **15** % At **1000** Hz.
5.	Power Rating	Normal **300** mW. Maximum **600** mW.
6.	Lowest Resonant Frequency	**380** ± **20** % Hz.
7.	Output Sound Pressure Lever	**80** ± **3** db / 0.3 Watt . 0.5 Meter.
	(S.P.L.)	Average at **600, 800, 1000, 1200** Hz.
8.	Frequency Range	**200** ~ **20000** Hz. Average S P L - 10 db.
9.	Distortion	**5** % Maximum At **1000** Hz. **300** mW.
10.	Abnormal Sound Test	Must Be Normal Test By **1.6** Volts. Sine Wave.
11.	Load Test	White Noise With Weighted Filter **1.6** Volts.(RMS) **24** Hrs.
12.	Polarity	Diaphragm shall move Forward when Apply a Positive DC.
		Current to the "+" or "Marked" Terminal.

MOUNTING NOTICE

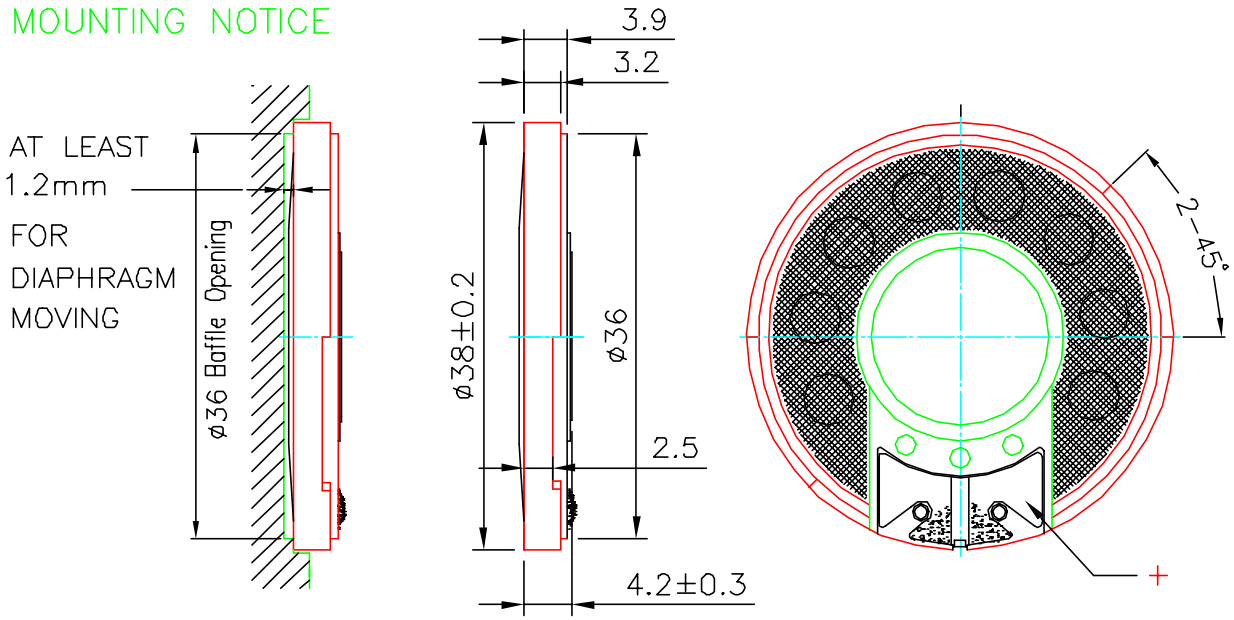

Unit : mm Housing Material : ABS

G:\THIN\38CG\38CR08G-M75ND.DWG J10

38CR08G-M75ND VOL:1.549V(0.3W) DIS:0.5M VANSONIC
X:1.0000kHz *Y:79.32dB ZA:Live Curve SSR Fund.

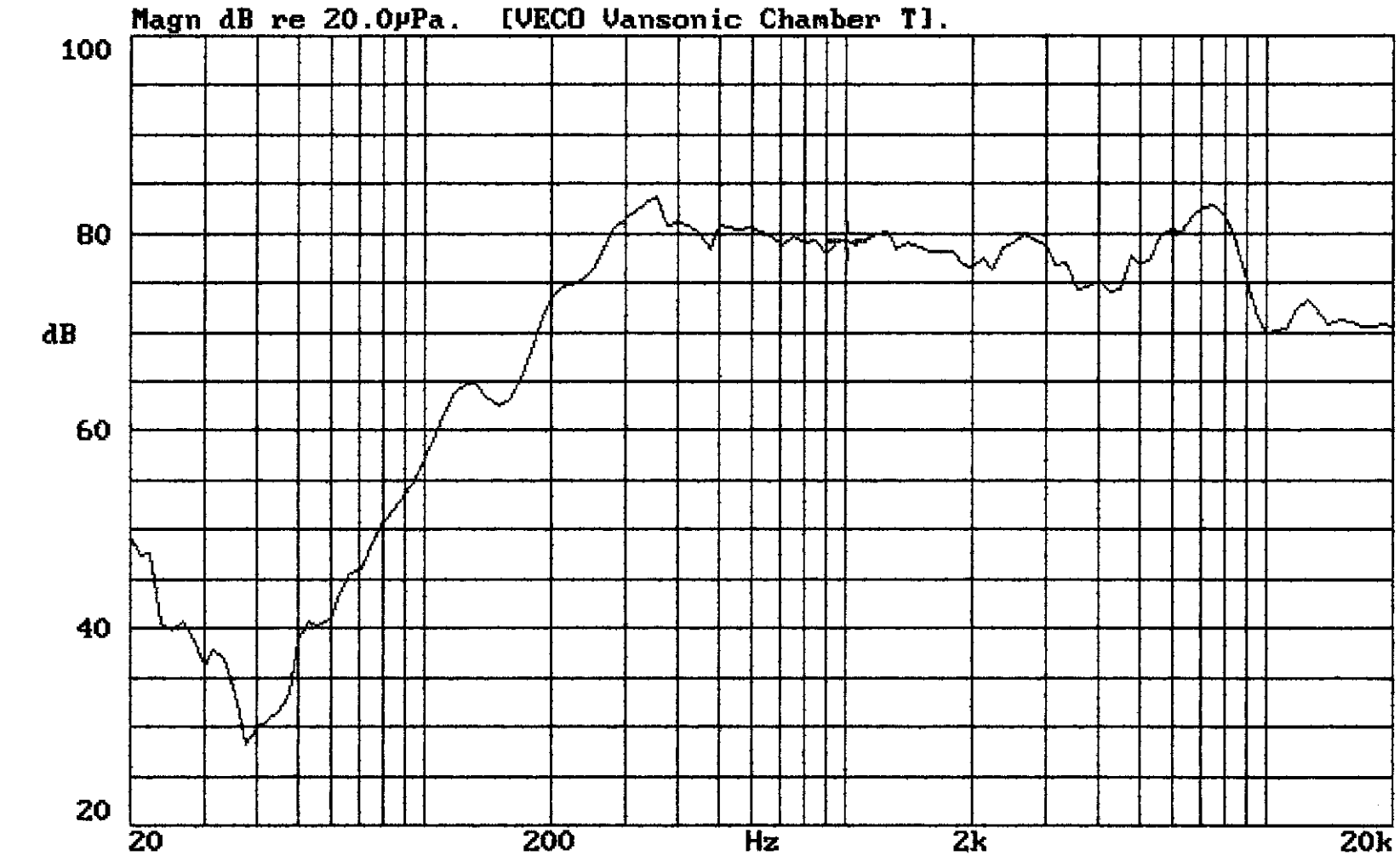

19-OCT-1999 10:48:23

Mode: SPEAKER