VECO VANSONIC ENTERPRISE CO.,LTD.

ELITALIA

tel. 02.3361.1626 info@elitaliaweb.it
fax 02.2626.1009 www.elitaliaweb.it

1.	**MODEL:**	**50CS08FH-1** -M75NT(Clear Mylar) -M75ND(Black Mylar)
2.	Dimension	Outer Diameter **50** mm. Baffle Opening **48.87** mm.
		Height **Refer to Drawing** Weight **13.1** Grams.
3.	Magnet	Materials **Rare Earth** Size ø **12.5x1.5** mm.
4	Nominal Impedance	**8** Ω ± **15** % At **1000** Hz.
5.	Power Rating	Normal **300** mW. Maximum **600** mW.
6.	Lowest Resonant Frequency	**400** ± **20** % **Hz.**
7.	Output Sound Pressure Lever	**85** ± **3** db / **0.3** Watt . **0.5**Meter.
	(S.P.L.)	Average at **600, 800, 1000, 1200** Hz.
8.	Frequency Range	**200** ~ **5000** Hz. Average S P L - 10 db.
9.	Distortion	**5** % Maximum At 1k Hz. **300** mW.
10.	Abnormal Sound Test	Must be Normal Tested By **1.6** Volts. Sine Wave.
11.	Load Test	White Noise with Weighted Filter **1.6** Volts.(RMS) **24** Hrs.
12.	Polarity	Diaphragm shall move Forward when Apply a Positive DC.
		Current to the "+" or "Marked" Terminal.

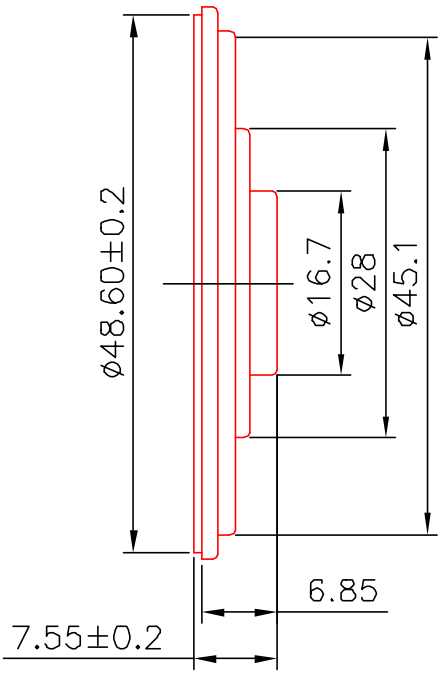

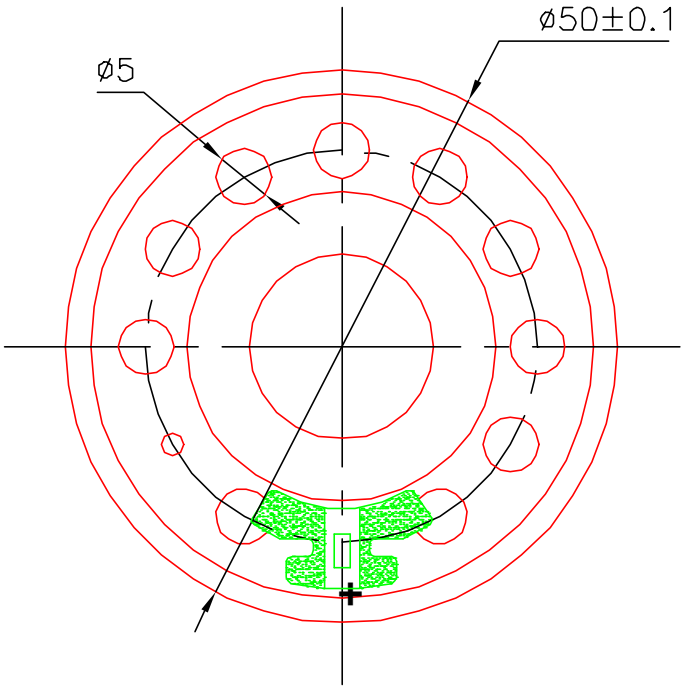

Unit : mm Housing Material : METAL

50CS08FH-1-M75ND VOL:1.549V(0.3W) DIS:0.5M VANSONIC
X:1.0000kHz *Y:83.45dB ZA:Live Curve SSR Fund.

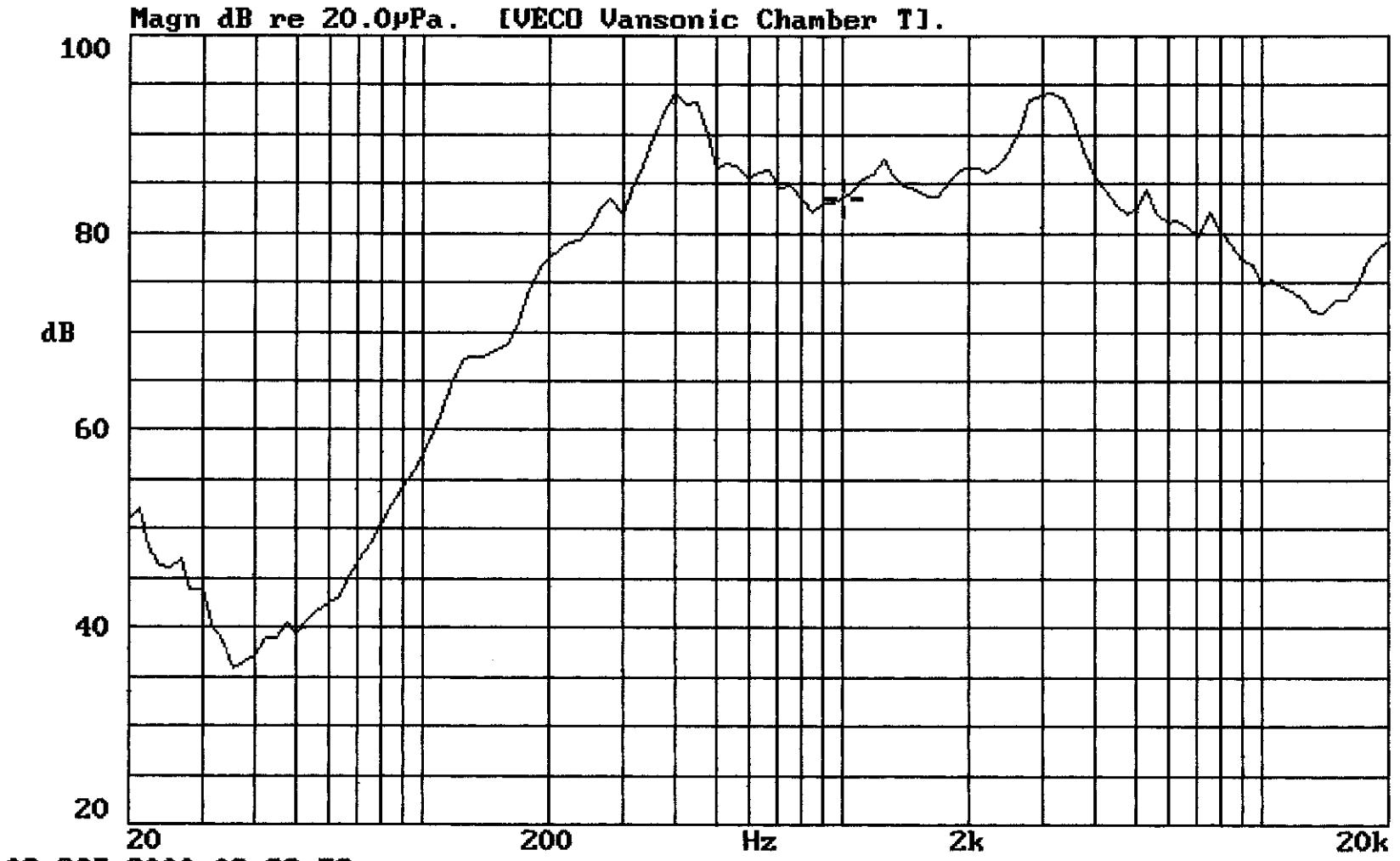

03-OCT-2000 09:29:59

Mode: SPEAKER

VECO VANSONIC ENTERPRISE CO.,LTD.

ELITALIA

tel. 02.3361.1626 info@elitaliaweb.it
fax 02.2626.1009 www.elitaliaweb.it

1.	**MODEL:**	**50FL25GP**
2.	Dimension	Outer Diameter **50** mm. Baffle Opening **46** mm.
		Height **Refer to Drawing** . Weight **46.8** Grams.
3.	Magnet	Materials **Ferrite** . Size ø 29x Ø12.6x5 mm.
4	Nominal Impedance	**25** Ω ± **15** % At **1500** Hz.
5.	Power Rating	Normal **400** mW. Maximum **800** mW.
6.	Lowest Resonant Frequency	**400** ± **15** % Hz.
7.	Output Sound Pressure Lever	**87** ± **3** db / 0.4 Watt **.** 0.5 Meter.
	(S.P.L.)	Average at **800, 1000, 1200, 1500** Hz.
8.	Frequency Range	**200** ~ **10000** Hz. Average S P L - 10 db.
9.	Distortion	**5** % Maximum At **1000** Hz. **400** mW.
10.	Abnormal Sound Test	Must be Normal Tested By **3.2** Volts. Sine Wave.
11.	Load Test	White Noise with Weighted Filter **3.2** Volts.(RMS) **24** Hrs.
12.	Polarity	Diaphragm shall move Forward when Apply a Positive DC.
		Current to the "+" or "Marked" Terminal.

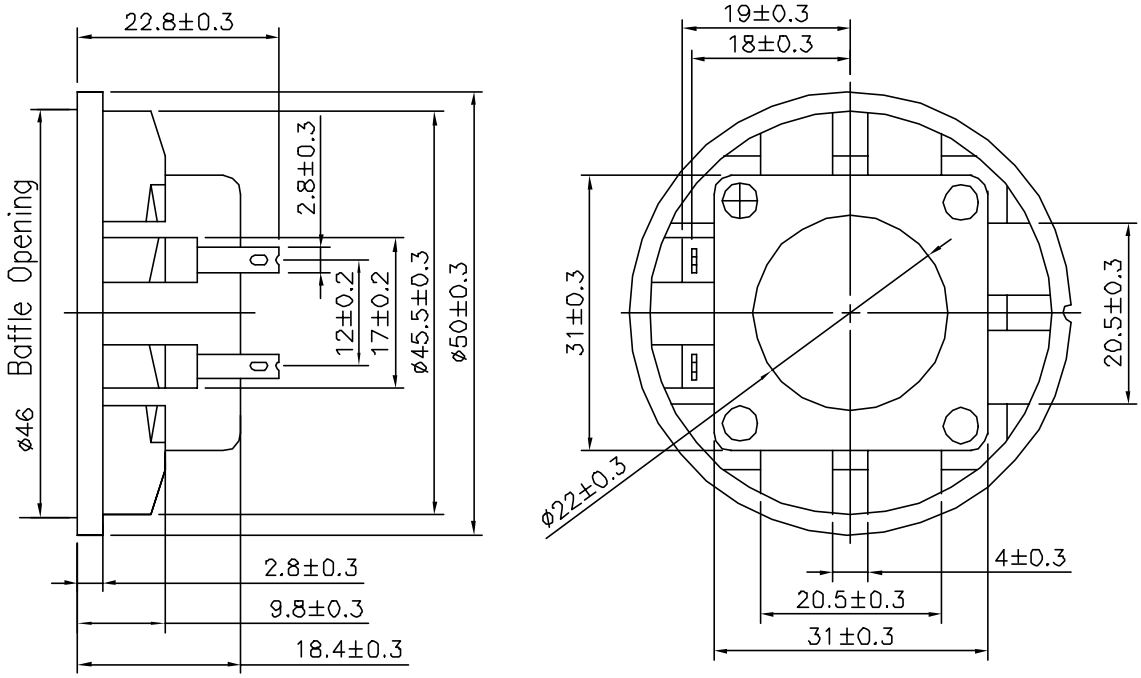

Unit : mm Housing Material : ABS

50FL25GP VOL:3.162V(0.4W) DIS:0.5M VANSONIC

X:1.0000kHz *Y:87.66dB ZA:1.0000 SSR Fund.

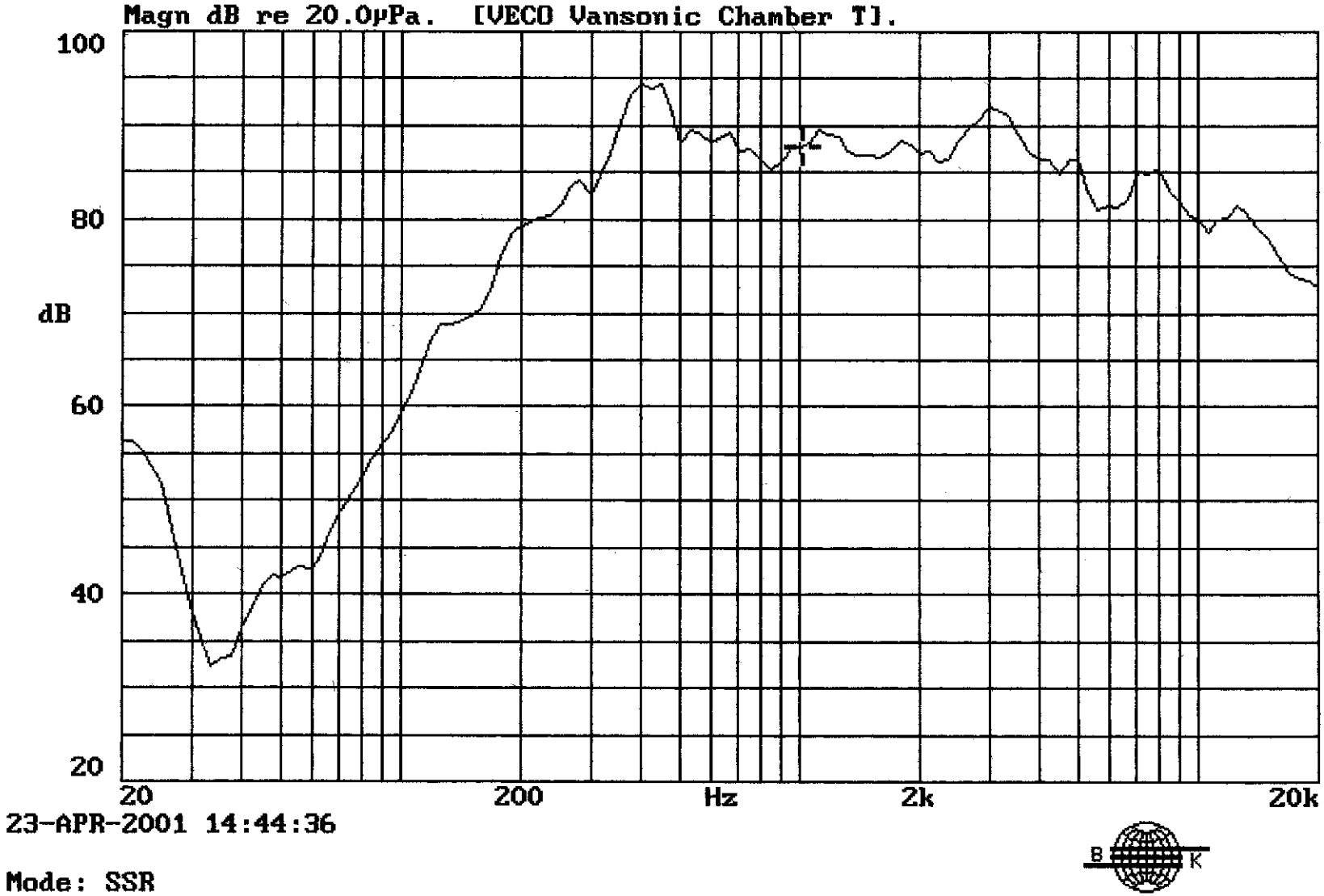

VECO **Foshan Vanson Electronics Co., Ltd.**

168, Industrial Development Zone, Shitou Chun, Lanshi Zhen, Foshan, Guangdong, CHINA

ELITALIA tel. 02.3361.1626 info@elitaliaweb.it
fax 02.2626.1009 www.elitaliaweb.it

1.	**MODEL:**	**50FL08GP-4**
2	Dimension & Weight	Outer Diameter **50**ϕ mm Face side Dimension **46**ϕ mm
		Baffle Opening **46**ϕ mm
		Height **Refer to drawing** Weight **46.8** Grams
3	Magnet	Materials **Rare Earth** Size ϕ **27.5X12.9X5** mm
4.	Nominal Impedance	**8** Ω ± 15 %, At **1500** Hz.
5.	Power Rating	Normal **1.0** Watts Maximum **2.0** Watts Sine Wave.
		Normal Watts Maximum Watts Square Wave.
6.	Resonant Frequency	**400** ± 20 % Hz.
7.	Output Sound Pressure Level (S.P.L.)	**87** ± 3 db/ **1.0** Watt・0.5 Meter
		Average at **800, 1000, 1200, 1500** Hz.
8.	Frequency Range	**200** ~ **10000** Hz. Average SPL – 10 db.
9.	Distortion	**5** % Maximum At **1000** Hz. **1.0** W.
10	Abnormal Sound test	Must be Normal Tested By **2.83** Volts. Sine Wave.
11	Load Test	White Noise **2.83** Volts. (RMS.) **96** Hours.
12	Polarity	Diaphragm shall move Forward while Apply a Positive DC Signal to the " + " or " Marked " Terminal.

Above Measuring condition under temperature : 25~35℃ R.H. 25 ~75%. According to standard GB/T9396-1996

Mechanical and vibration test

13	High Temperature	+ 60 ± 2 °C Humidity Random for 96 Hours. (GB2423.2-81)
14	Low Temperature	– 25 ± 2 °C Humidity Random for 96 Hours. (GB2423.1-81)
15	Humidity	+ 40 ± 2 °C Relative Humidity (RH) 90 ~ 95 % 96 Hours.
16	Vibration	Frequency 30 ± 15 Hz, Amplitude 1.5 mm for 3 Hours. (GB11606.8-89)
17	Drop test	75 CM free falling on Concrete floor, 10 times. (GB2423. 8-81)
After test leave speakers at room temperature for 1 hour, SPL shall not deviate by ± 3 db from pre-test		
18	Temperature Cycle test	– 25 ~ + 60 °C 4 Cycles Temperature test. (GB5170.18-87)

After test leave speakers at room temperature for 1 hour, SPL shall not deviate by ± 4 db from pre-test Measurement, and meet above spec. item 6. 7. 8. 9. 10.

Please refer to next pages for more detailed testing method.

Test method and User precaution.

1. Characteristics measured according to standard GB/T 9396-1996

   1.1 Except other specified, measuring are under Temperature 25~35℃ R.H. 25 ~75%

   1.2. Judgement condition Temperature 20 ±2 R.H. 63~67%

2. Output Sound Pressure Level (S.P.L.) and distortion testing setup

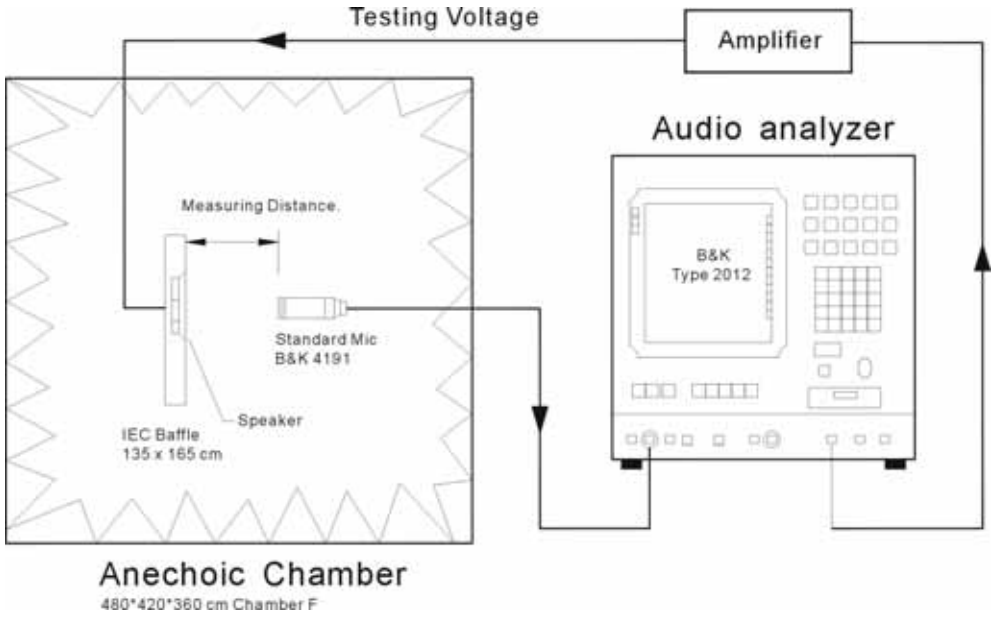

3. Environment & Mechanical test:

   3.1 High Temperature: GB2423.2-81

   After exposure the speaker in the + 60 ± 2 °C chamber for 96 hours, then leave the speaker at room temperature for 1 hour, the SPL should not deviate by ± 3 db, and resonant frequency should not deviate by ± 50 Hz, compare with pre-test measurement.

   3.2 Low Temperature: GB2423.1-81

   After exposure the speaker in the –25 ± 2 °C chamber for 96 hours, then leave the speaker at room temperature for 1 hour, the SPL should not deviate by ± 3 db, and resonant frequency should not deviate by ± 50 Hz, compare with pre-test measurement.

   3.3 Temperature cycle: GB5170.18-87

   After exposure the speaker in the chamber, temperature cycle setting as below shows, SPL should not deviate by ± 4 db, and resonant frequency should not deviate by ± 80 Hz, compare with pre-test measurement.

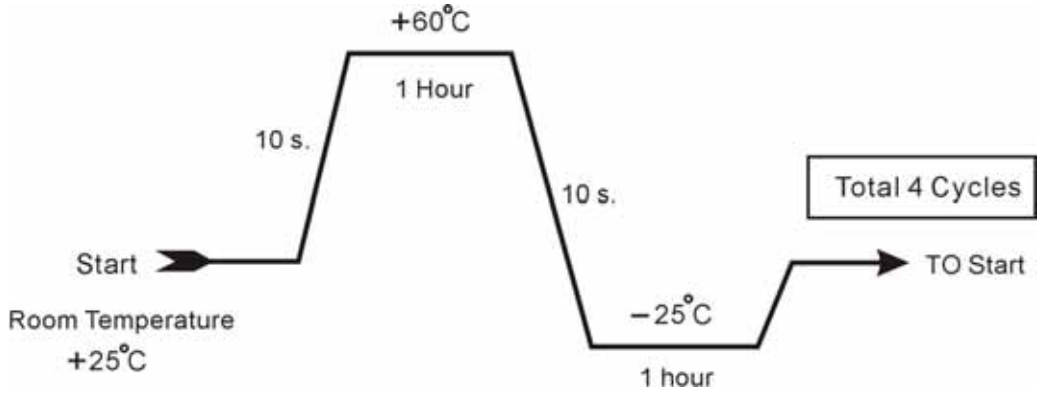

3.4 Humidity: GB5170.18-87

After exposure the speaker in the + 40±2 °C, relative humidity 90% ~ 95% chamber for 96 hours, then leave the speaker at room temperature for 6 hours, the SPL should not deviate by ±3 db, and resonant frequency should not deviate by ±50 Hz, compare with pre-test measurement.

3.5 Vibration: GB11606.8-89

Frequency 30±15 Hz, Amplitude 1.5 mm for 3 Hours. After test, SPL shall not deviate by ±3 db from pre-test measurement,

3.6 Load test: GB/T 9396-1996

Speaker should not fail after apply 20 ~ 20K Hz white noise rated power input (RMS), 96 hours. After test, SPL shall not deviate by ±3 db from pre-test measurement,

3.7 Drop test: GB2423. 8-81

75 cm free falling on concrete floor, 10 times. After test, SPL shall not deviate by ±3 db from pre-test measurement,

4. Mounting **precaution**

In order to keep speaker work normally, there shall leave enough free space for diaphragm moving, minimum distance required is marked in speaker mechanical drawing.

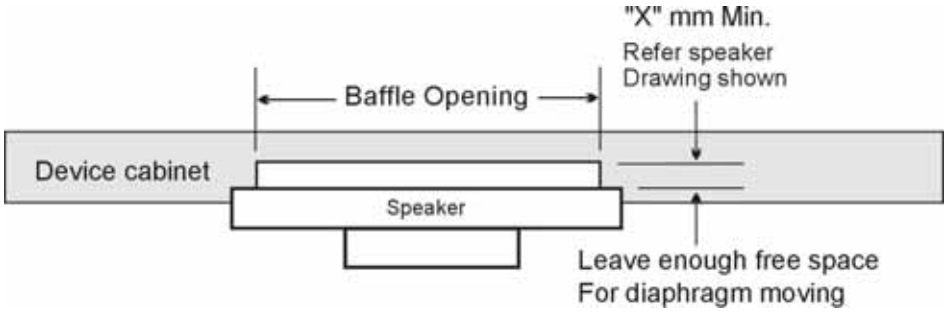

5. Measuring & standard referenced

Abstract from GB/T 9396-1996 and IEC 268-5:1989 methods of measurement for main characteristics of loud speakers.

5.1 Maximum input voltage

Maximum input voltage is in the shortest time. The speaker can bear simulation signal, that persist time is 1 second, interval 60 seconds, repeated 60 times, but the speaker wouldn't be damaged externally. The maximum signal voltage is the maximum input voltage in/the shortest time.

5.2 Rated sine voltage.

It is stipulated by manufacturer, sine signal voltage that make speaker work continuously in rated frequency range, but the speaker wouldn't be damaged heartily or mechanically. The persist time of the voltage is 1 hour.

5.3 The shortest time maximum power.

It is corresponding with the shortest time maximum input voltage, its definition is U_{st}^2/R, U_{st} indicates the shortest input power, R indicates the rated impedance.

5.4 The long time maximum power.

The long time maximum power is corresponding with the ling time maximum input voltage, Its definition is $U_{lt}2/R$, U_{lt} indicates the long time maximum input voltage, R indicates the rated impedance.

5.4 The rated sine power.

The rated sine power is corresponding with the rated sine voltage, its definition is U_s^2/R, Us indicates the maximum sin voltage, R indicates the rated impedance.

5.5 The rated noise power.

The rated noise power is corresponding with the rated noise voltage, its definition is U_n^2/R, Un indicates the rated noise voltage, R indicates the rated impedance.

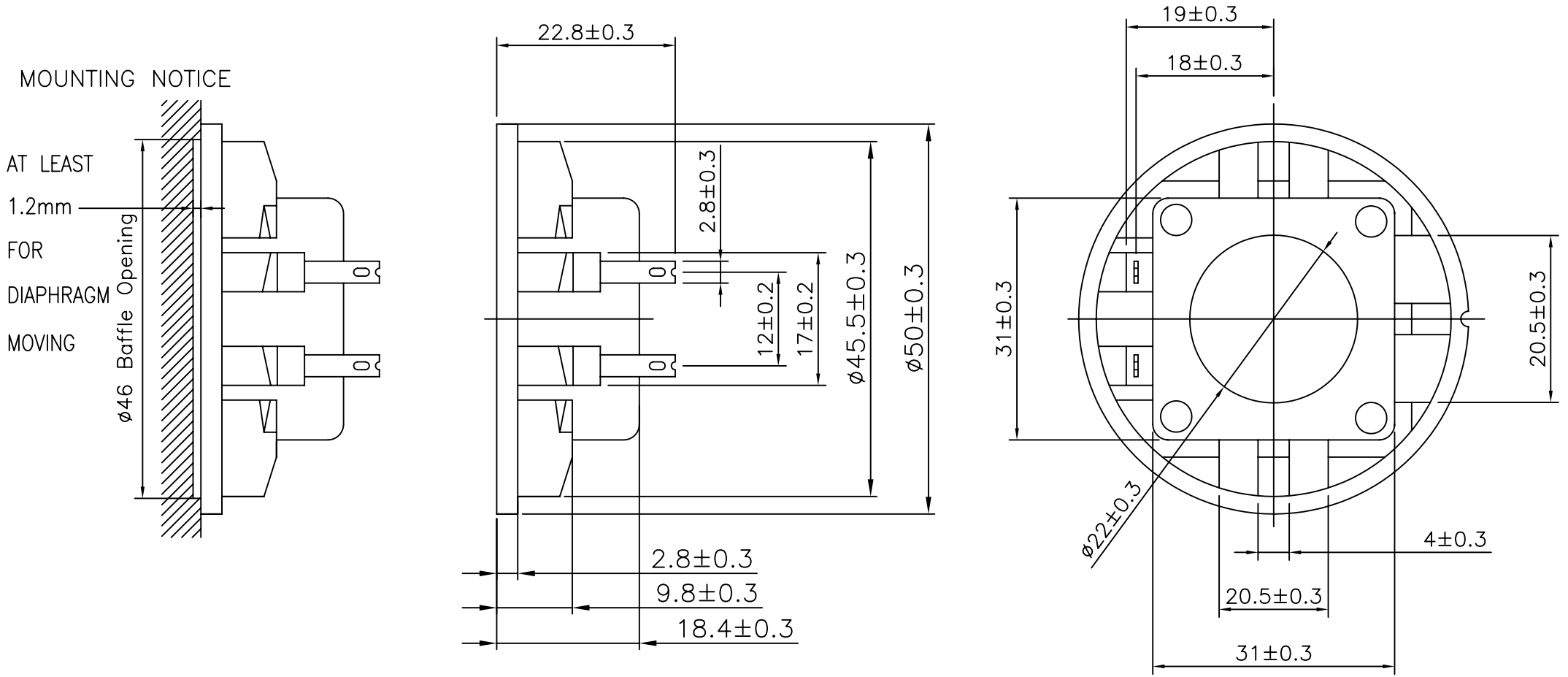

V1.0	06.07.20	
VERSION	DATE	DESCRIPTION

Foshan Vanson Enterprise CO.,Ltd.
宏立電子
E-MAIL:VECOF@FS165.COM
TEL:+86-757-83815788 FAX:+86-757-83818577

Title: P50FL08GP-4

F:\SPEC\THIN\50FL\P50FL08GP-4.DWG

Unit: mm	Scale:	Appr.: 高紅華	
Tol.:其餘±1/2IT13		CHK.: 曾憲財	Dwg.: 吳明光

P50FL08GP-4 VOL:2.83V(1W) DIS:0.5M VANSONIC

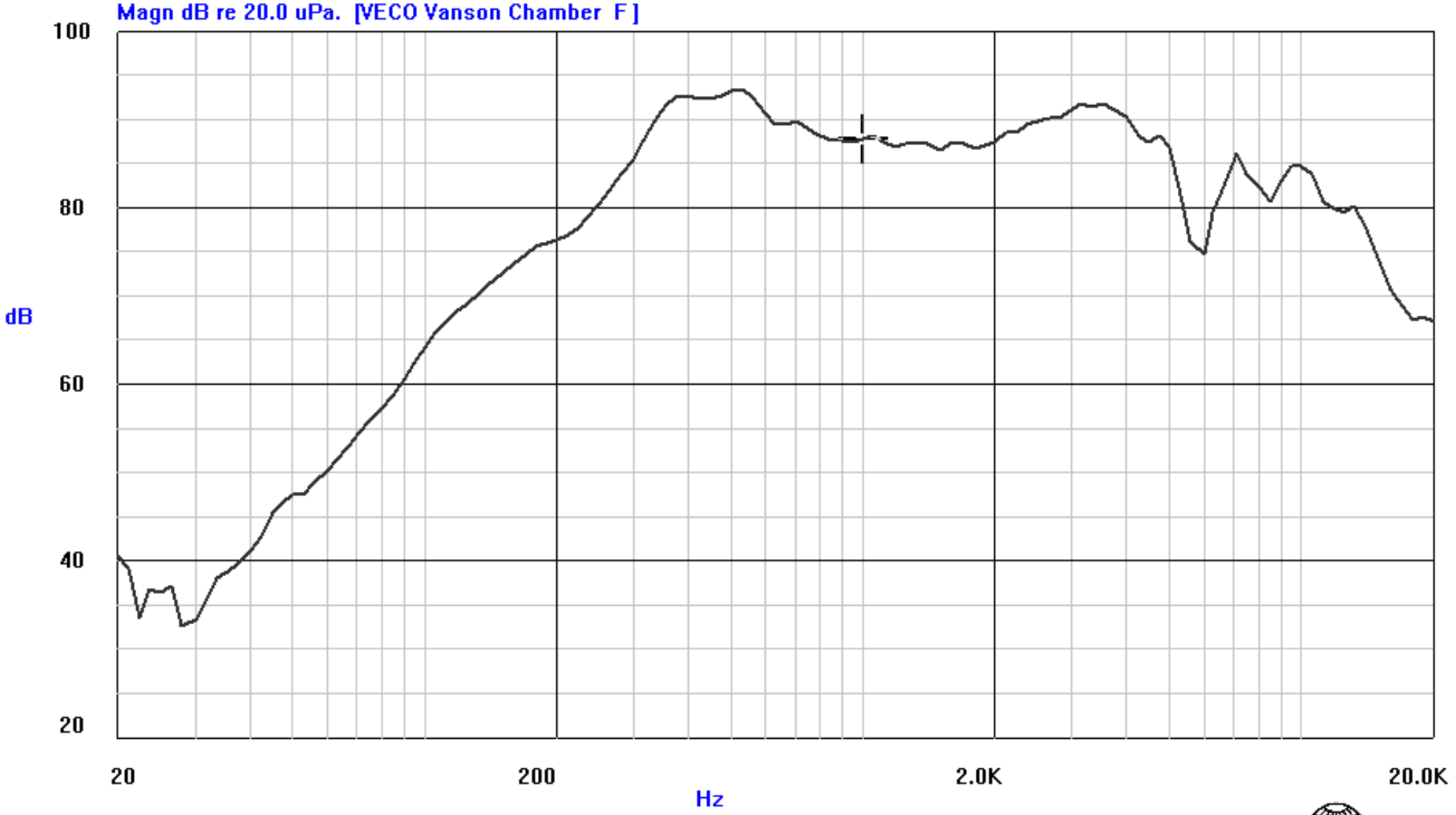

Current Curve: 0 X: 1000 Hz Y: 87.78 dB
Time[Y/M/D H:M:S]: 2006/ 7/20 2:41:49

VECO Vanson Electronics(Nanhai) Co,.Ltd

Luocun Industrial zone Nanhai district Foshan City Guangdong Province China

ELITALIA tel. 02.3361.1626 info@elitaliaweb.it
fax 02.2626.1009 www.elitaliaweb.it

1.	**MODEL:**	**50FL08GP-3(PEI)**
2	Dimension & Weight	Outer Diameter ***ϕ50***mm Face side Dimension ***ϕ46***mm
		Baffle Opening***ϕ46*** mm
		Height **Refer to drawing** Weight **46.8**Grams
3	Magnet	Materials **Rare Earth** Size ***ϕ27.5Xϕ12.9X5***mm
4.	Nominal Impedance	**8** Ω ± 15 %, At **1500** Hz.
5.	Power Rating	Normal **0.4** Watts Maximum **0.8** Watts Sine Wave.
		Normal Watts Maximum Watts Square Wave.
6.	Resonant Frequency	**350** ± 20 % Hz.
7.	Output Sound Pressure Level (S.P.L.)	**87** ± 3 db/ **0.4** Watt **0.5** Meter
		Average at **800** **1000** **1200** **1500** Hz.
8.	Frequency Range	**200** **～** **10000** Hz. Average SPL – 10 db.
9.	Distortion	**5** % Maximum At **1000** Hz. **0.4** W.
10	Abnormal Sound test	Must be Normal Tested By **1.8** Volts. Sine Wave.
11	Load Test	White Noise **1.8** Volts. (RMS.) **96** Hours.
12	Polarity	Diaphragm shall move Forward while Apply a Positive DC Signal to the " + " or " Marked " Terminal.

Above Measuring condition under temperature : 25~35℃ R.H. 25 ~75%. According to standard GB/T9396-1996

Mechanical and vibration test

13	High Temperature	+60 ± 2 °C Humidity Random for 96 Hours. (GB2423.2-81)
14	Low Temperature	– 25 ± 2 °C Humidity Random for 48 Hours. (GB2423.1-81)
15	Humidity	+ 40 ± 2 °C Relative Humidity (RH) 90 ~ 95 % 48 Hours.
16	Vibration	Frequency 30 ± 15 Hz, Amplitude 1.5 mm for 3 Hours. (GB11606.8-89)
17	Drop test	75 CM free falling on Concrete floor, 10 times. (GB2423. 8-81)
After test leave speakers at room temperature for 1 hour, SPL shall not deviate by ± 3 db from pre-test		
18	Temperature Cycle test	– 25 ~ + 60 °C 4 Cycles Temperature test. (GB5170.18-87)

After test leave speakers at room temperature for 1 hour, SPL shall not deviate by ± 4 db from pre-test Measurement, and meet above spec. item 6. 7. 8. 9. 10.

Please refer to next pages for more detailed testing method.

Test method and User precaution.

1. Characteristics measured according to standard GB/T 9396-1996
   1.1. Except other specified, measuring are under Temperature 25~35℃ R.H. 25 ~75%
   1.2. Judgement condition Temperature 20 ±2 R.H. 63~67%
   1.3 .Product shelf life is valid for 12 months only.

2. Output Sound Pressure Level (S.P.L.) and distortion testing setup

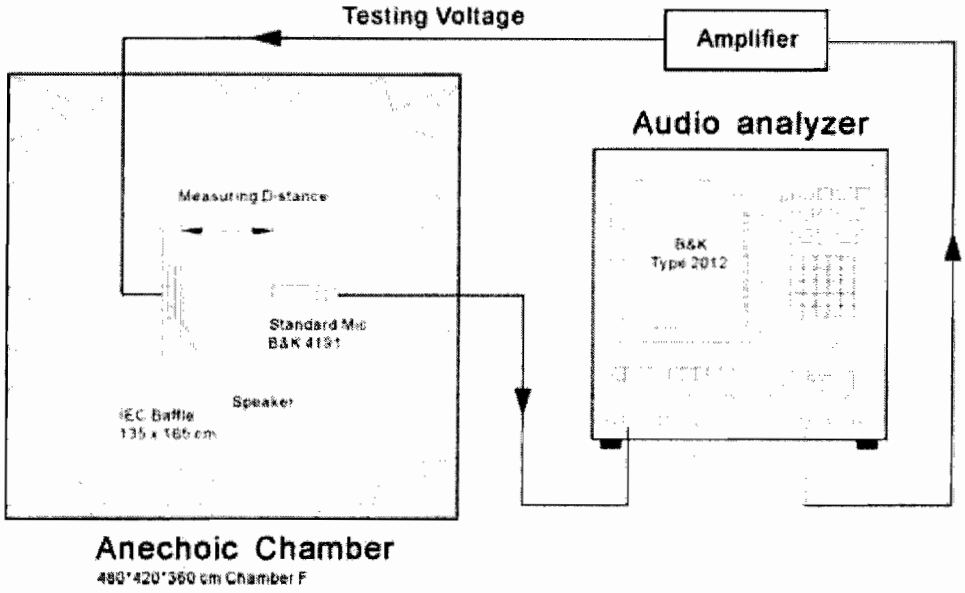

3. Environment & Mechanical test:

3.1 High Temperature: GB2423.2-81

After exposure the speaker in the + 60 ± 2 °C chamber for 96 hours, then leave the speaker at room temperature for 1 hour, the SPL should not deviate by ± 3 db, and resonant frequency should not deviate by ± 50 Hz, compare with pre-test measurement.

3.2 Low Temperature: GB2423.1-81

After exposure the speaker in the –25 ± 2 °C chamber for 96 hours, then leave the speaker at room temperature for 1 hour, the SPL should not deviate by ± 3 db, and resonant frequency should not deviate by ± 50 Hz, compare with pre-test measurement.

3.3 Temperature cycle: GB5170.18-87

After exposure the speaker in the chamber, temperature cycle setting as below shows, SPL should not deviate by ± 4 db, and resonant frequency should not deviate by ± 80 Hz, compare with pre-test measurement.

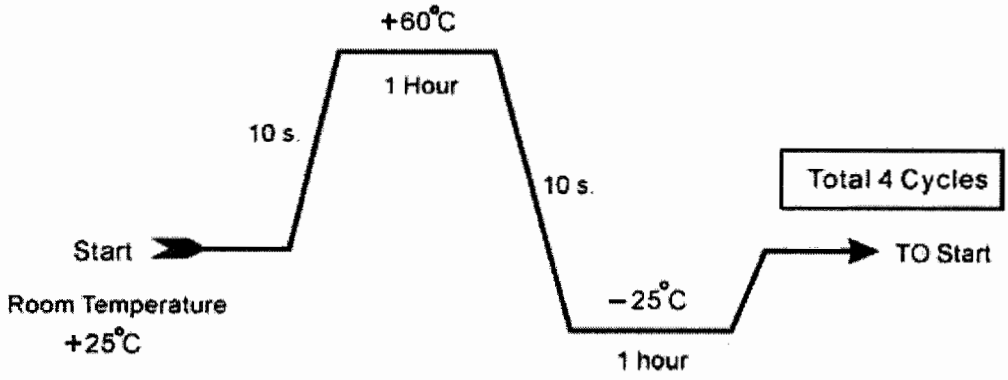

3.4 Humidity: GB5170.18-87

After exposure the speaker in the + 40±2 °C, relative humidity 90% ~ 95% chamber for 48hours, then leave the speaker at room temperature for 6 hours, the SPL should not deviate by ±3 db, and resonant frequency should not deviate by ±50 Hz, compare with pre-test measurement.

3.5 Vibration: GB11606.8-89

Frequency 30±15 Hz, Amplitude 1.5 mm for 3 Hours. After test, SPL shall not deviate by ±3 db from pre-test measurement,

3.6 Load test: GB/T 9396-1996

Speaker should not fail after apply 20 ~ 20K Hz white noise rated power input (RMS), 96 hours. After test, SPL shall not deviate by ±3 db from pre-test measurement,

3.7 Drop test: GB2423. 8-81

75 cm free falling on concrete floor, 10 times. After test, SPL shall not deviate by ±3 db from pre-test measurement,

4. Mounting **precaution**

In order to keep speaker work normally, there shall leave enough free space for diaphragm moving, minimum distance required is marked in speaker mechanical drawing.

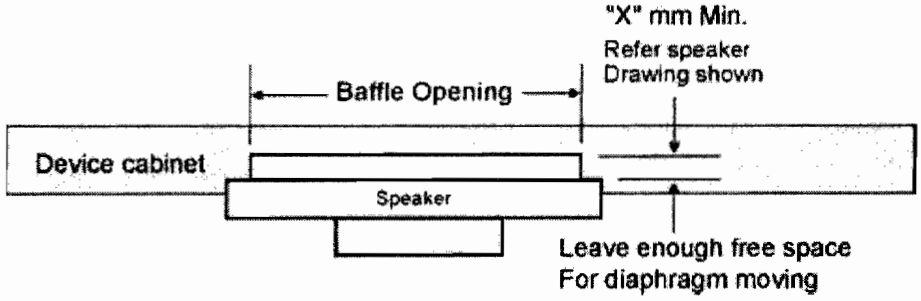

5. **Measuring & standard referenced**

Abstract from GB/T 9396-1996 and IEC 268-5:1989 methods of measurement for main characteristics of loud speakers.

5.1 Maximum input voltage

Maximum input voltage is in the shortest time. The speaker can bear simulation signal, that persist time is 1 second, interval 60 seconds, repeated 60 times, but the speaker wouldn't be damaged externally. The maximum signal voltage is the maximum input voltage in/the shortest time.

5.2 Rated sine voltage.

It is stipulated by manufacturer, sine signal voltage that make speaker work continuously in rated frequency range, but the speaker wouldn't be damaged heartily or mechanically. The persist time of the voltage is 1 hour.

5.3 The shortest time maximum power.

It is corresponding with the shortest time maximum input voltage, its definition is U_{st}^2/R, U_{st} indicates the shortest input power, R indicates the rated impedance.

5.4 The long time maximum power.

The long time maximum power is corresponding with the ling time maximum input voltage, Its definition is $U_{lt}2/R$, U_{lt} indicates the long time maximum input voltage, R indicates the rated impedance.

5.5 The rated sine power.

The rated sine power is corresponding with the rated sine voltage, its definition is U_s^2/R, Us indicates the maximum sin voltage, R indicates the rated impedance.

5.6The rated noise power.

The rated noise power is corresponding with the rated noise voltage, its definition is U_n^2/R, Un indicates the rated noise voltage, R indicates the rated impedance.

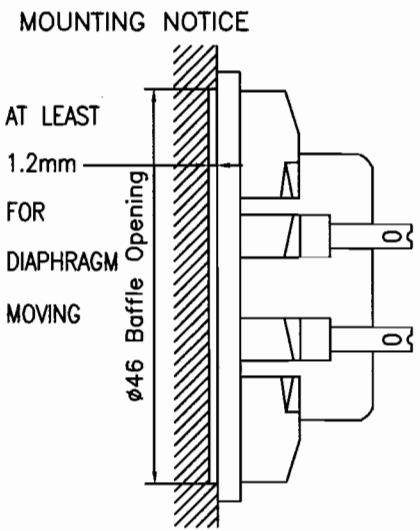

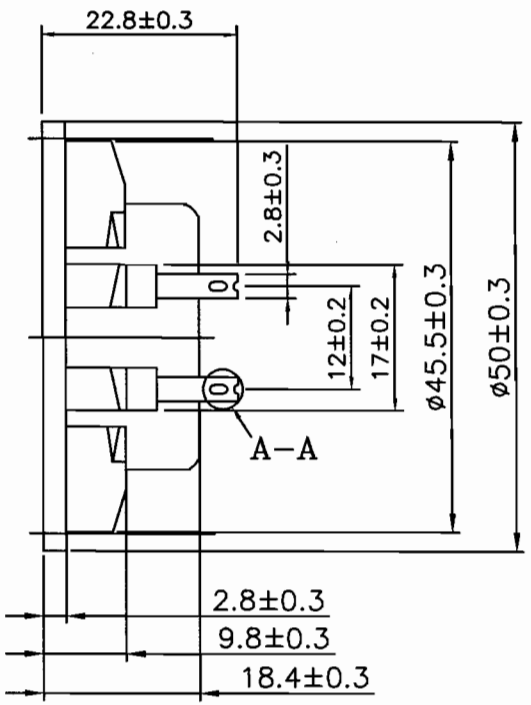

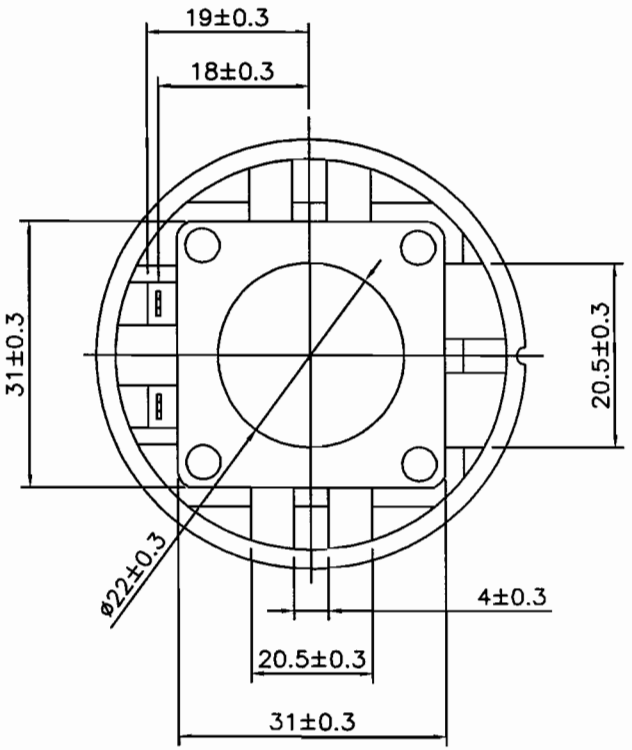

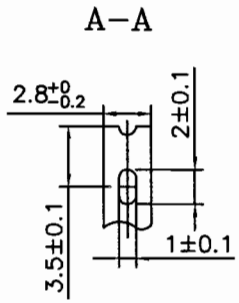

RANGE \ TOL				✓
0–8	±0.05	±0.10	±0.20	±0.30
8–16	±0.10	±0.15	±0.25	±0.40
16–24	±0.15	±0.20	±0.30	±0.50
24–50	±0.20	±0.25	±0.40	±1.0
50–100	±0.25	±0.30	±0.50	±2
>100	±0.40	±0.40	±0.80	±3

VERSION	DATE	DESCRIPTION
V1.0	07.04.07	

Vanson Electronics (Nanhai) Co., Ltd.
鋐利電子
E-MAIL: vecof@vansonic.net
TEL:+86-757-88536828 FAX:+86-757-88536826

Title: P50FL08GP-3

F:\RD\SPEC\SQUARE\50\P50FL08GP-3.DWG

Unit: mm	Scale:	Appr.: 高紅華	
Tol.:		CHK.: 曾憲財	Dwg.: 韋華刊

P50FL08GP-3 VOL:1.79V(0.4W) DIS:0.5M VANSONIC
X:1.0000kHz *Y:85.67dB ZA:Live Curve SSR Fund.

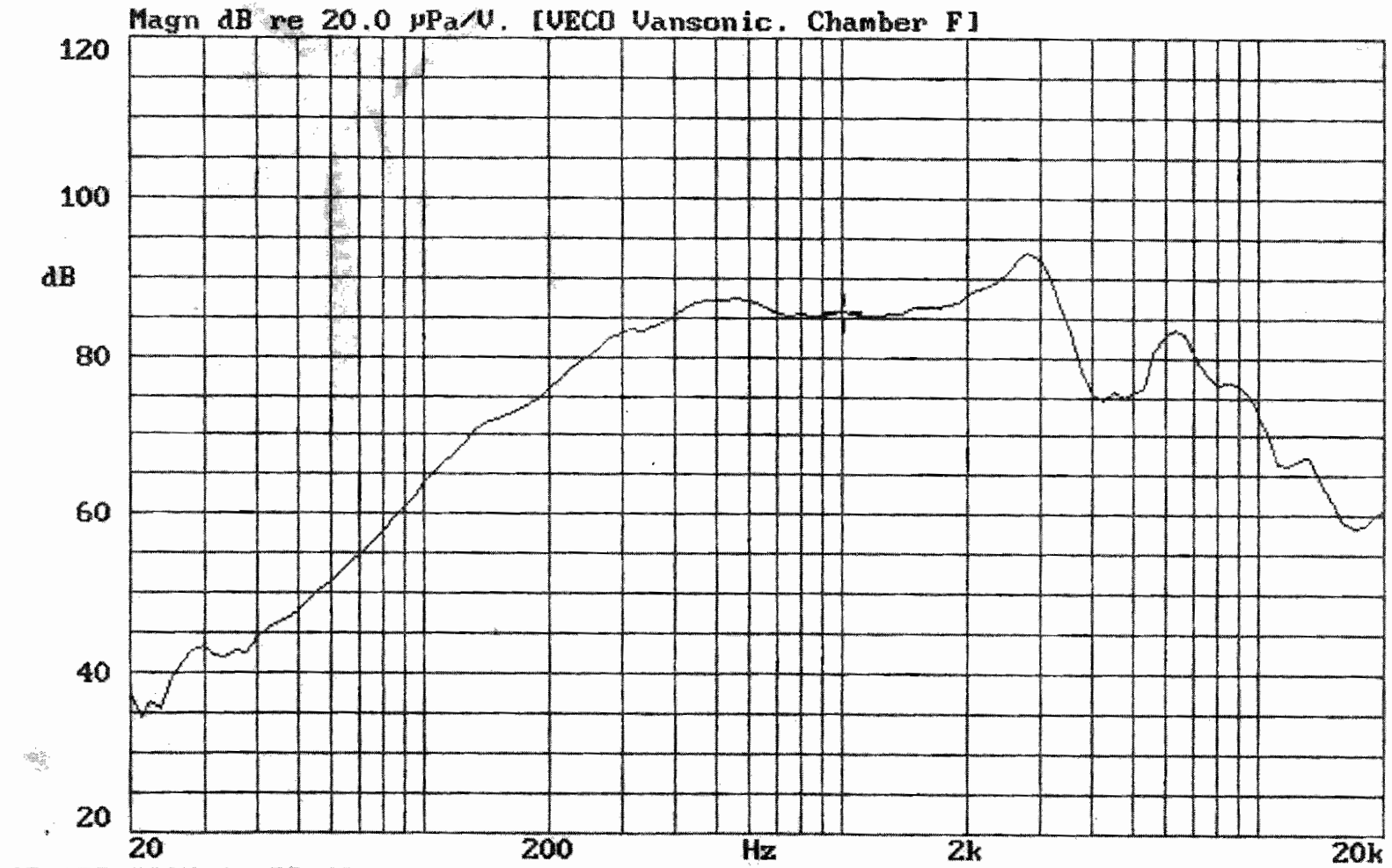

13-APR-2007 11:39:46

Mode: SPEAKER

VECO VANSONIC ENTERPRISE CO.,LTD.

ELITALIA

tel. 02.3361.1626 info@elitaliaweb.it
fax 02.2626.1009 www.elitaliaweb.it

1.	**MODEL:**	**50FL08GP-1**
2.	Dimension	Outer Diameter **50** mm. Baffle Opening **46** mm.
		Height **Refer to Drawing** . Weight **46.8** Grams.
3.	Magnet	Materials **Ferrite** . Size ø 29x Ø12.6x5 mm.
4	Nominal Impedance	**8** Ω ± **15** % At **1500** Hz.
5.	Power Rating	Normal **0.4** W. Maximum **0.8** W.
6.	Lowest Resonant Frequency	**350** ± **15** % Hz.
7.	Output Sound Pressure Lever	**87** ± **3** db / 0.4 Watt . 0.5 Meter.
	(S.P.L.)	Average at **800** **1000,** **1200,** **1500** Hz.
8.	Frequency Range	**200** ~ **18000** Hz. Average S P L - 10 db.
9.	Distortion	**2** % Maximum At **1000** Hz. **0.4** W.
10.	Abnormal Sound Test	Must be Normal Tested By **1.8** Volts. Sine Wave.
11.	Load Test	White Noise with Weighted Filter **1.8** Volts.(RMS) **24** Hrs.
12.	Polarity	Diaphragm shall move Forward when Apply a Positive DC.
		Current to the "+" or "Marked" Terminal.

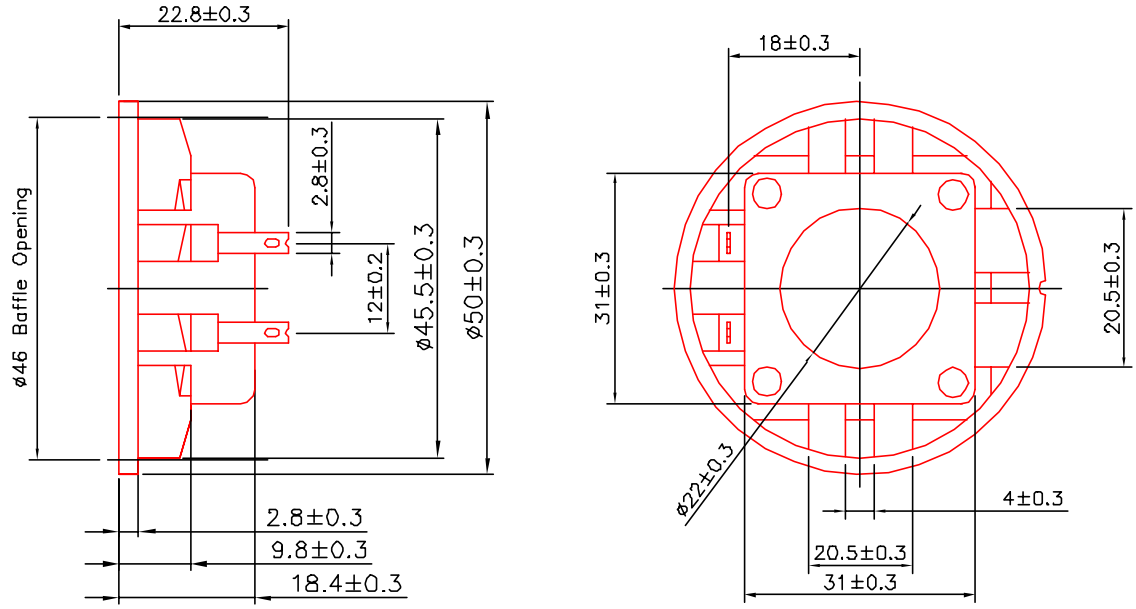

Unit : mm Housing Material : ABS

50FL08GP-1 VOL:1.8V(0.4W) DIS:0.5M VANSONIC
X:1.0000kHz *Y:86.65dB ZA:1.0000 SSR Fund.

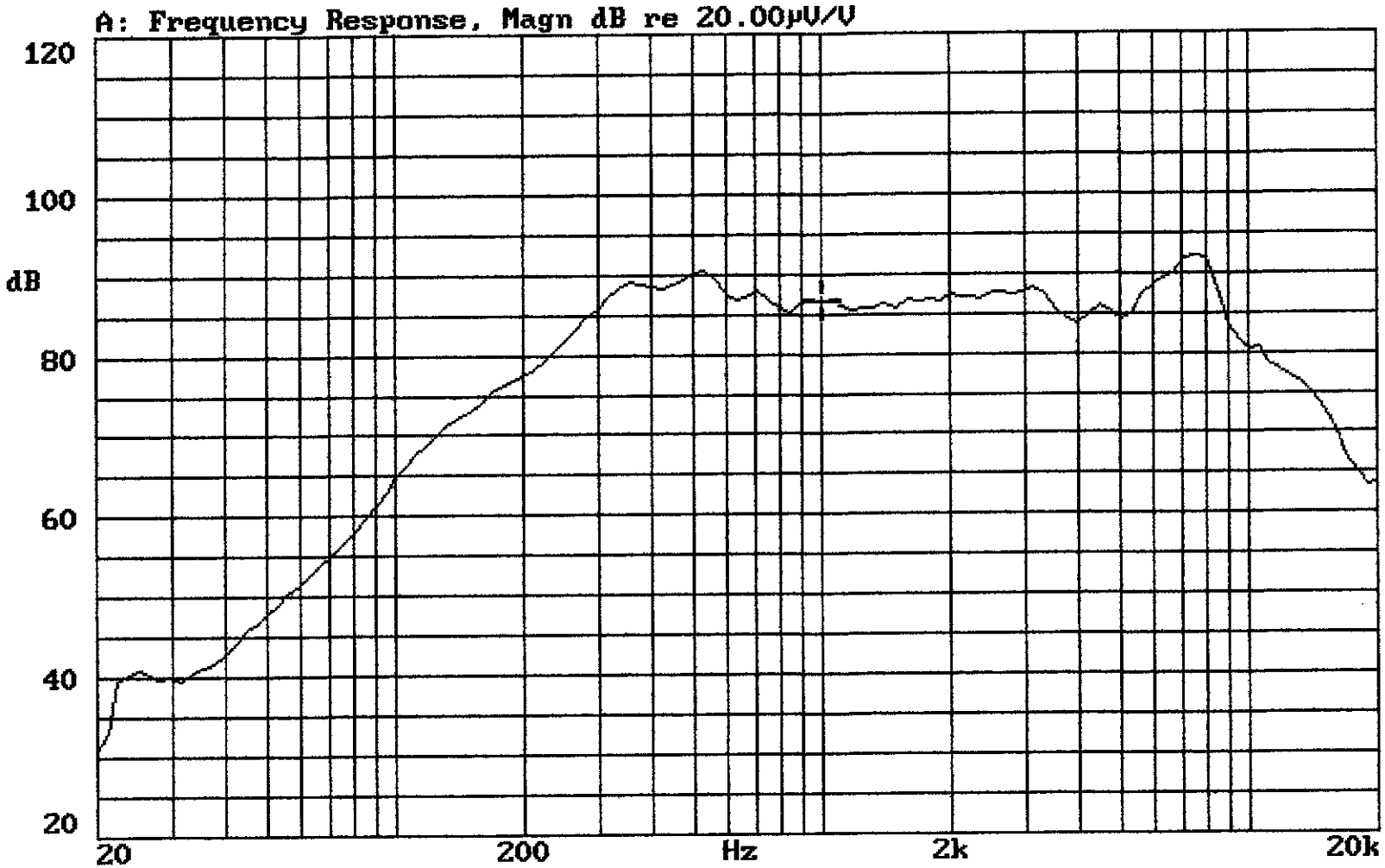

26-SEP-2002 14:28:35

Mode: SPEAKER

VECO VANSONIC ENTERPRISE CO.,LTD.

ELITALIA

tel. 02.3361.1626 info@elitaliaweb.it
fax 02.2626.1009 www.elitaliaweb.it

1.	**MODEL:**	**50CS08G** -M75ND(Black Mylar)
2.	Dimension	Outer Diameter 50 mm. Baffle Opening 46.5 mm.
		Height Refer to Drawing. Weight 11.0 Grams.
3.	Magnet	Materials Rare Earth . Size ∅ 12.5x1.5 mm.
4	Nominal Impedance	8 Ω ± 15 % At 1500 Hz.
5.	Power Rating	Normal 200 mW. Maximum 400 mW.
6.	Lowest Resonant Frequency	350 ± 20 % Hz.
7.	Output Sound Pressure Lever	80 ± 3 db / 0.2 Watt . 0.5 Meter.
	(S.P.L.)	Average at 600, 800, 1000, 1200 Hz.
8.	Frequency Range	190 ~ 10000 Hz. Average S P L - 10 db.
9.	Distortion	5 % Maximum At 1000 Hz. 200 mW.
10.	Abnormal Sound Test	Must be Normal Tested By 1.3 Volts. Sine Wave.
11.	Load Test	White Noise with Weighted Filter 1.3 Volts.(RMS) 24Hrs.
12.	Polarity	Diaphragm shall move Forward when Apply a Positive DC.
		Current to the "+" or "Marked" Terminal.

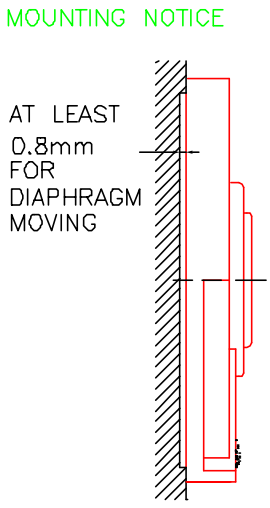

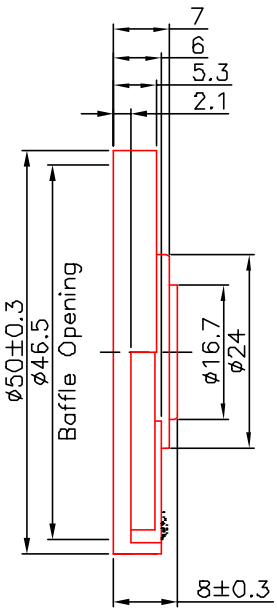

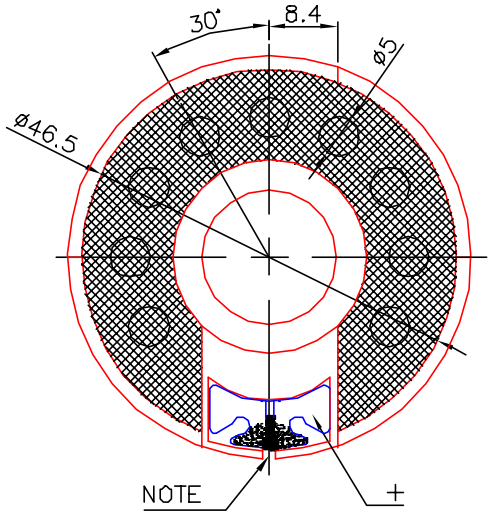

Note: This slot is reserved for VC lead wires, should not for other application

Unit : mm **Housing Material : ABS**

F:\\50\50CS-08.DWG J06

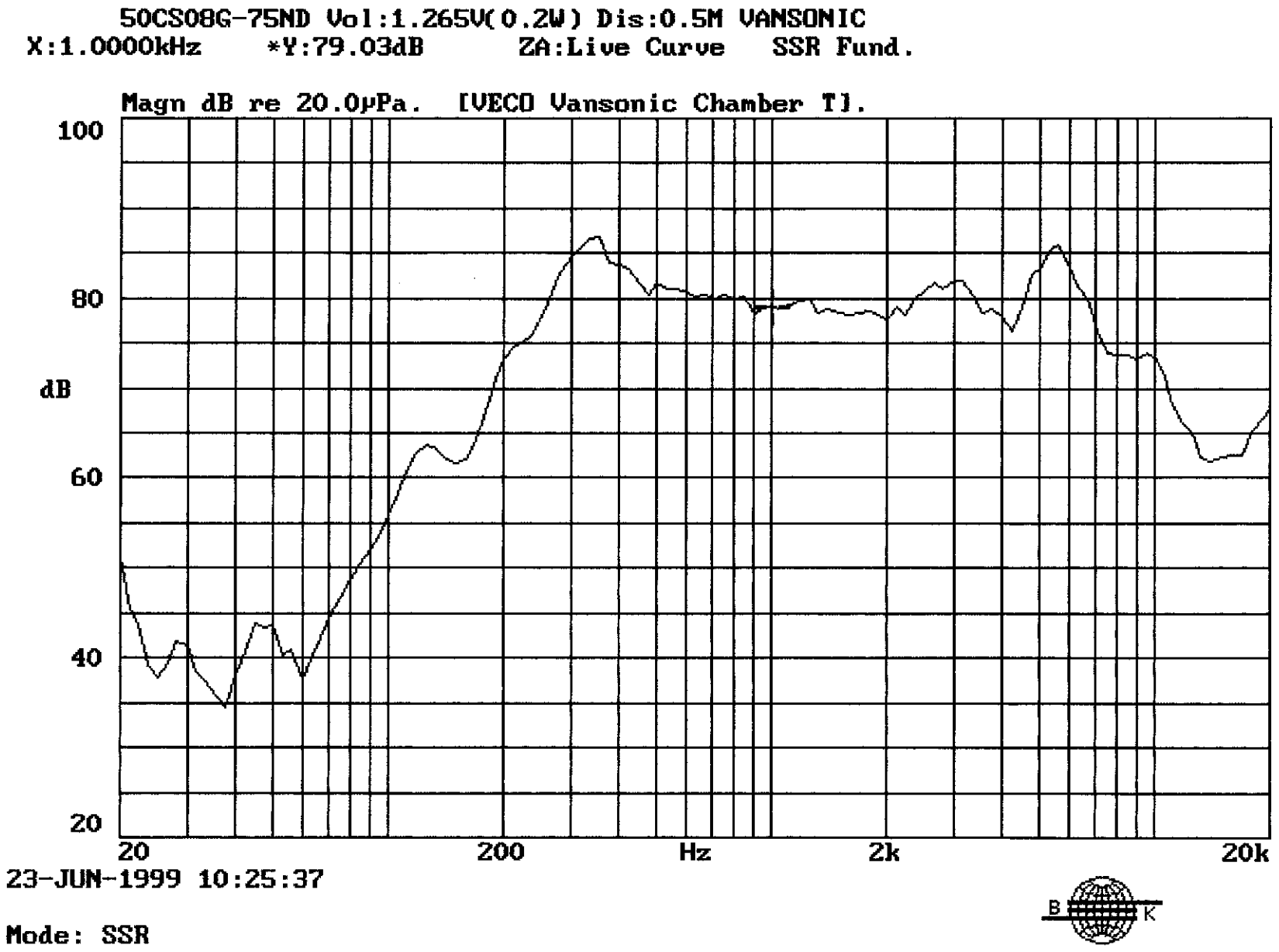
50CS08G-75ND Vol:1.265V(0.2W) Dis:0.5M VANSONIC
X:1.0000kHz *Y:79.03dB ZA:Live Curve SSR Fund.
Magn dB re 20.0µPa. [VECO Vansonic Chamber T].
100
80
dB
60
40
20
20
200
Hz
2k
20k
23-JUN-1999 10:25:37
Mode: SSR
B K

VECO VANSONIC ENTERPRISE CO.,LTD.

ELITALIA

tel. 02.3361.1626 info@elitaliaweb.it
fax 02.2626.1009 www.elitaliaweb.it

1.	**MODEL:**	**50CS08G-2** -M75ND(Black Mylar)
2.	Dimension	Outer Diameter 50 mm. Baffle Opening 42.5 mm.
		Height Refer to Drawing. Weight 11 Grams.
3.	Magnet	Materials Rare Earth . Size ∅ 12.5x1.5 mm.
4	Nominal Impedance	8 Ω ± 15 % At 1500 Hz.
5.	Power Rating	Normal 200 mW. Maximum 400 mW.
6.	Lowest Resonant Frequency	330 ± 20 % Hz.
7.	Output Sound Pressure Lever	81 ± 3 db / 0.2 Watt . 0.5 Meter.
	(S.P.L.)	Average at 800, 1000, 1200, 1500 Hz.
8.	Frequency Range	200 ~ 13000 Hz. Average S P L - 10 db.
9.	Distortion	5 % Maximum At 1000 Hz. 200 mW.
10.	Abnormal Sound Test	Must be Normal Tested By 1.3 Volts. Sine Wave.
11.	Load Test	White Noise with Weighted Filter 1.3 Volts.(RMS) 24Hrs.
12.	Polarity	Diaphragm shall move Forward when Apply a Positive DC.
		Current to the "+" or "Marked" Terminal.

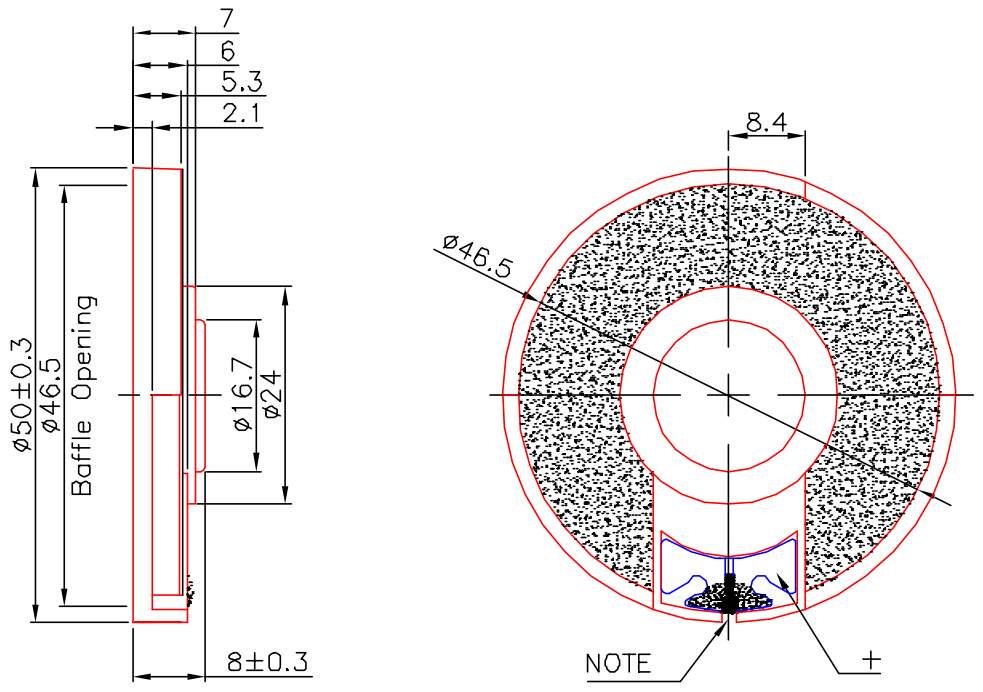

Note: This slot is reserved for VC lead wires, should not for other application

Unit : mm **Housing Material : ABS**

50CS08G-2-M75ND VOL:1.265V(0.2W) DIS:0.5M VANSONIC
X:1.0000kHz *Y:82.66dB ZA:1.0000 SSR Fund.

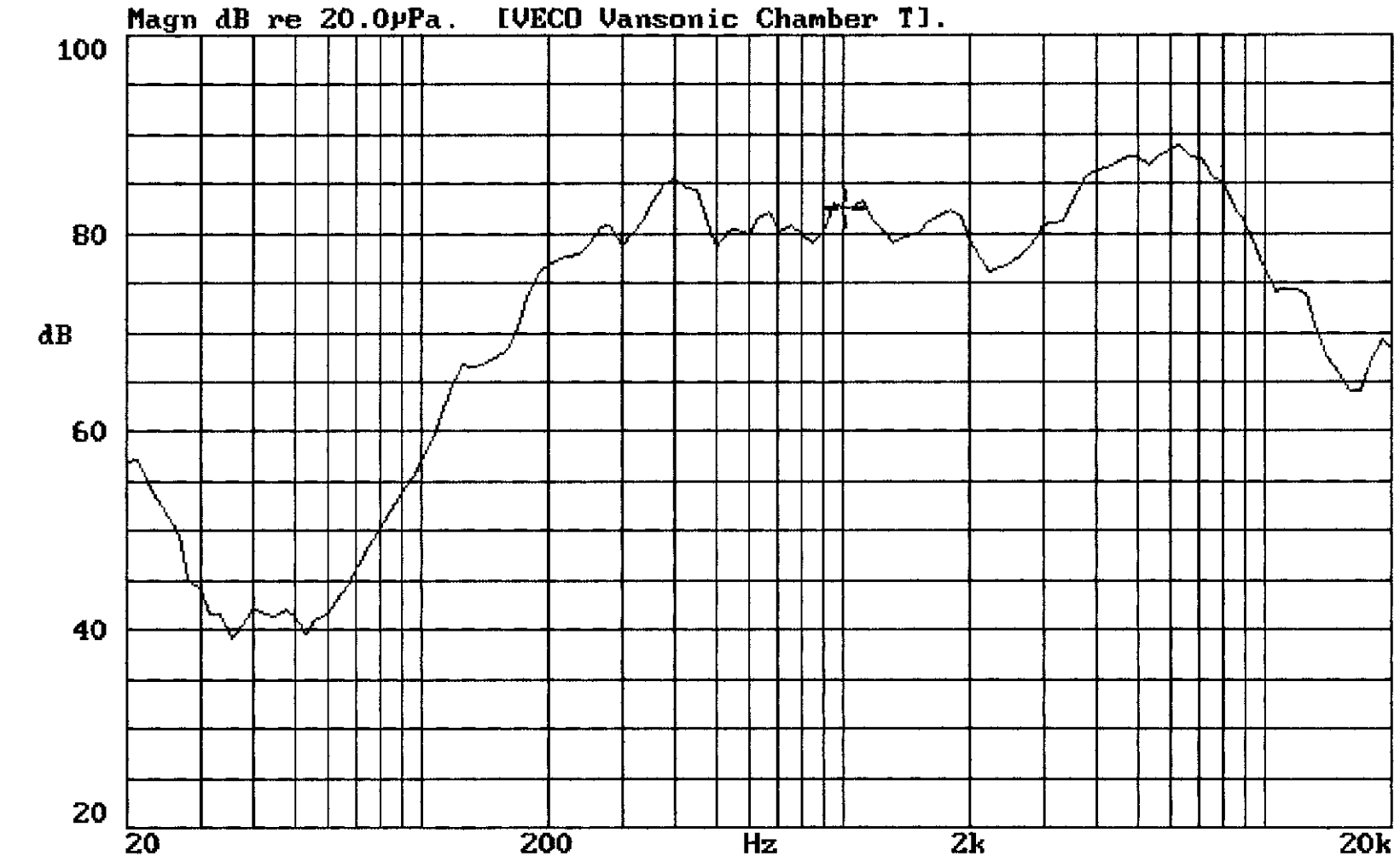

12-SEP-2001 12:40:29

Mode: SPEAKER

VECO VANSONIC ENTERPRISE CO.,LTD.

ELITALIA tel. 02.3361.1626 info@elitaliaweb.it
fax 02.2626.1009 www.elitaliaweb.it

1.	**MODEL:**	**50CS08FR** -M75NT(Clear Mylar) -M75ND(Black Mylar)
2.	Dimension	Outer Diameter **50** mm. Baffle Opening **44.2** mm.
		Height **Refer to Drawing** . Weight **12.4** Grams.
3.	Magnet	Materials **Rare Earth** . Size **12.5ØX 1.5** mm.
4	Nominal Lmpedance	**8** Ω ± **15** % At **1000** Hz.
5.	Power Rating	Normal **300** mW. Maximum **600** mW.
6.	Lowest Resonant Frequency	**400** ± **20** % Hz.
7.	Output Sound Pressure Lever	**84** ± **3** db / 0.3 Watt . 0.5 Meter.
	(S.P.L.)	Average at **600, 800, 1000, 1500** Hz.
8.	Frequency Range	**250** ~ **3500** Hz. Average S P L - 10 db.
9.	Distortion	**5** % Maximum At **1000** Hz. **300** mW.
10.	Abnormal Sound Test	Must Be Normal Test By **1.6** Volts. Sine Wave.
11.	Load Test	White Noise With Weighted Filter **1.6** Volts.(RMS) **24** Hrs.
12.	Polarity	Diaphragm shall move Forward when Apply a Positive DC.
		Current to the "+" or "Marked" Terminal.

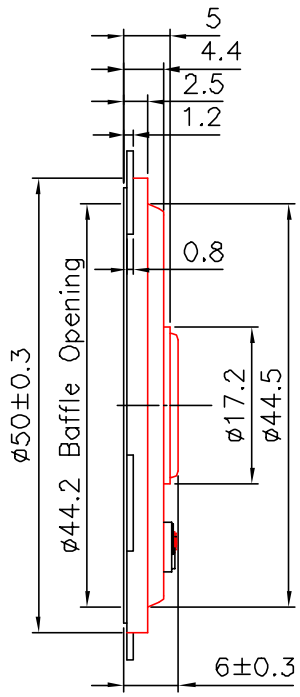

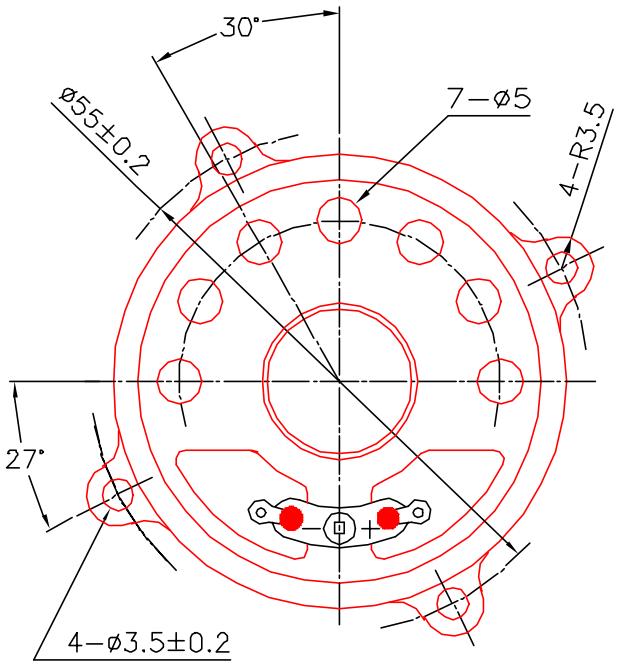

Unit : mm Housing Material : METAL

G:\50CFR\50CS08FR-7N.DWG J08

50CS08FR-M75ND Vol:1.549 (0.3W) Dis:0.5M VANSONIC
X:400.00Hz *Y:87.12dB ZA:Live Curve SSR Fund.

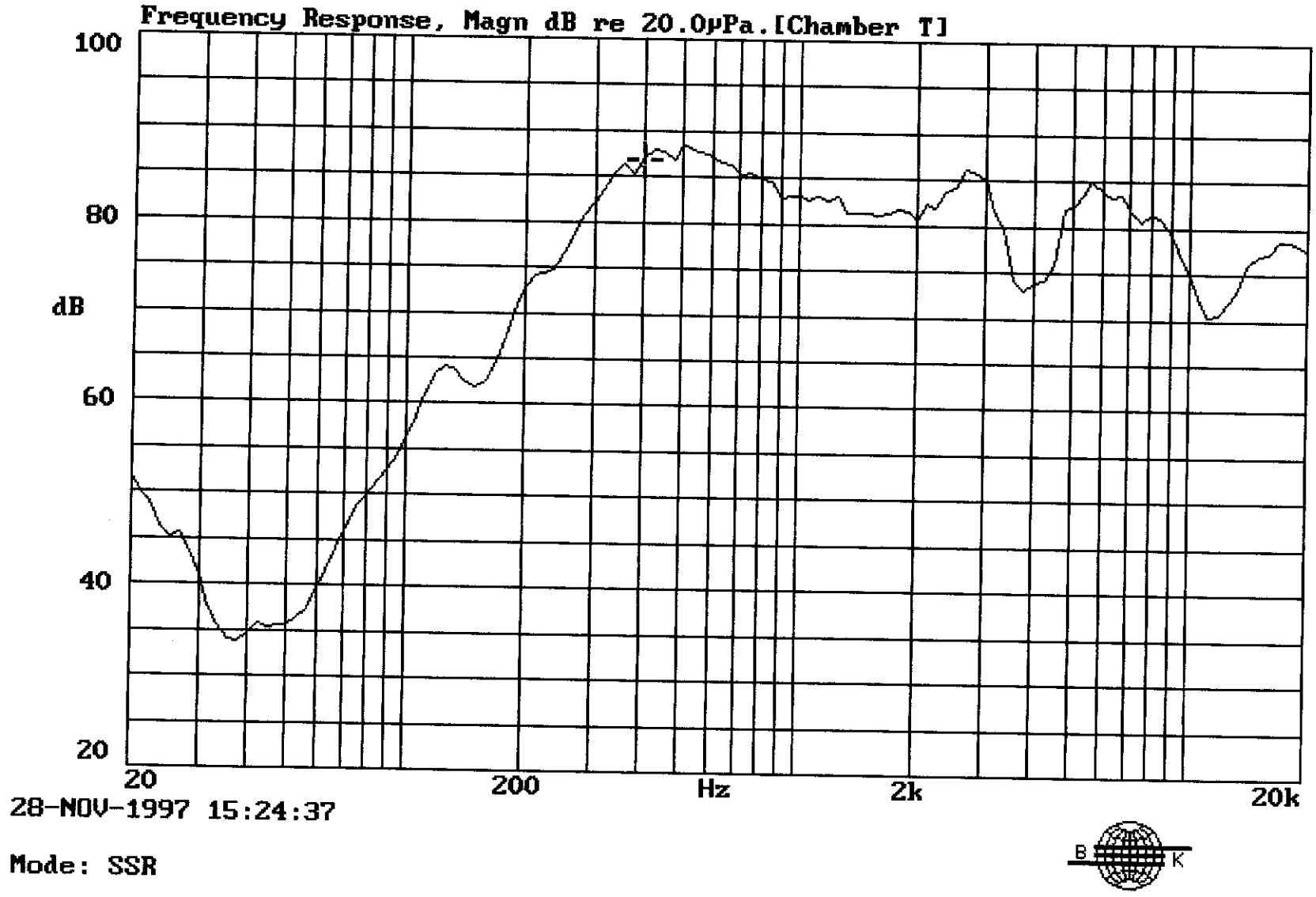

VECO VANSONIC ENTERPRISE CO.,LTD.
ELITALIA
tel. 02.3361.1626 info@elitaliaweb.it
fax 02.2626.1009 www.elitaliaweb.it

1.	**MODEL:**	**50CS08F** -M75NT(Clear Mylar) -M75ND(Black Mylar)
2.	Dimension	Outer Diameter **50** mm. Baffle Opening **44.2** mm.
		Height **Refer to Drawing** . Weight **12.4** Grams.
3.	Magnet	Materials **Rare Earth** . Size **12.5ØX 1.5** mm.
4	Nominal Lmpedance	**8** Ω ± **15** % At **1000** Hz.
5.	Power Rating	Normal **300** mW. Maximum **600** mW.
6.	Lowest Resonant Frequency	**400** ± **20** % Hz.
7.	Output Sound Pressure Lever	**84** ± **3** db / 0.3 Watt **.** 0.5 Meter.
	(S.P.L.)	Average at **600, 800, 1000, 1500** Hz.
8.	Frequency Range	**250** ~ **3500** Hz. Average S P L - 10 db.
9.	Distortion	**5** % Maximum At **1000** Hz. **300** mW.
10.	Abnormal Sound Test	Must Be Normal Test By **1.6** Volts. Sine Wave.
11.	Load Test	White Noise With Weighted Filter **1.6** Volts.(RMS) **24** Hrs.
12.	Polarity	Diaphragm shall move Forward when Apply a Positive DC.
		Current to the "+" or "Marked" Terminal.

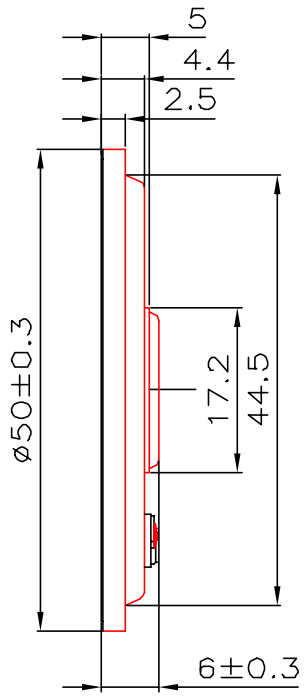

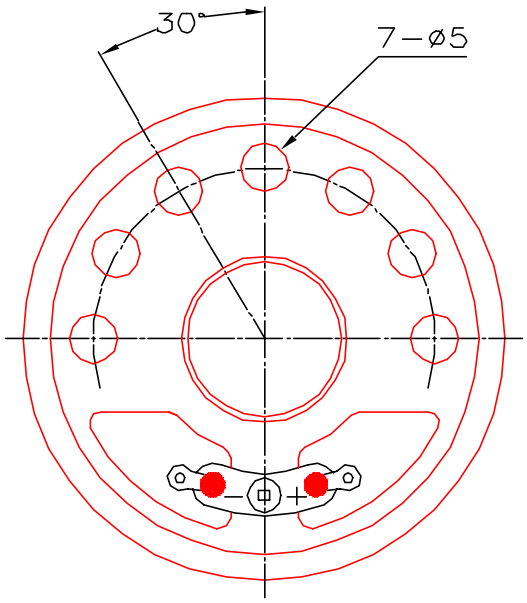

Unit : mm Housing Material : METAL

G:\\50CF\50CS08F-7N.DWG J08

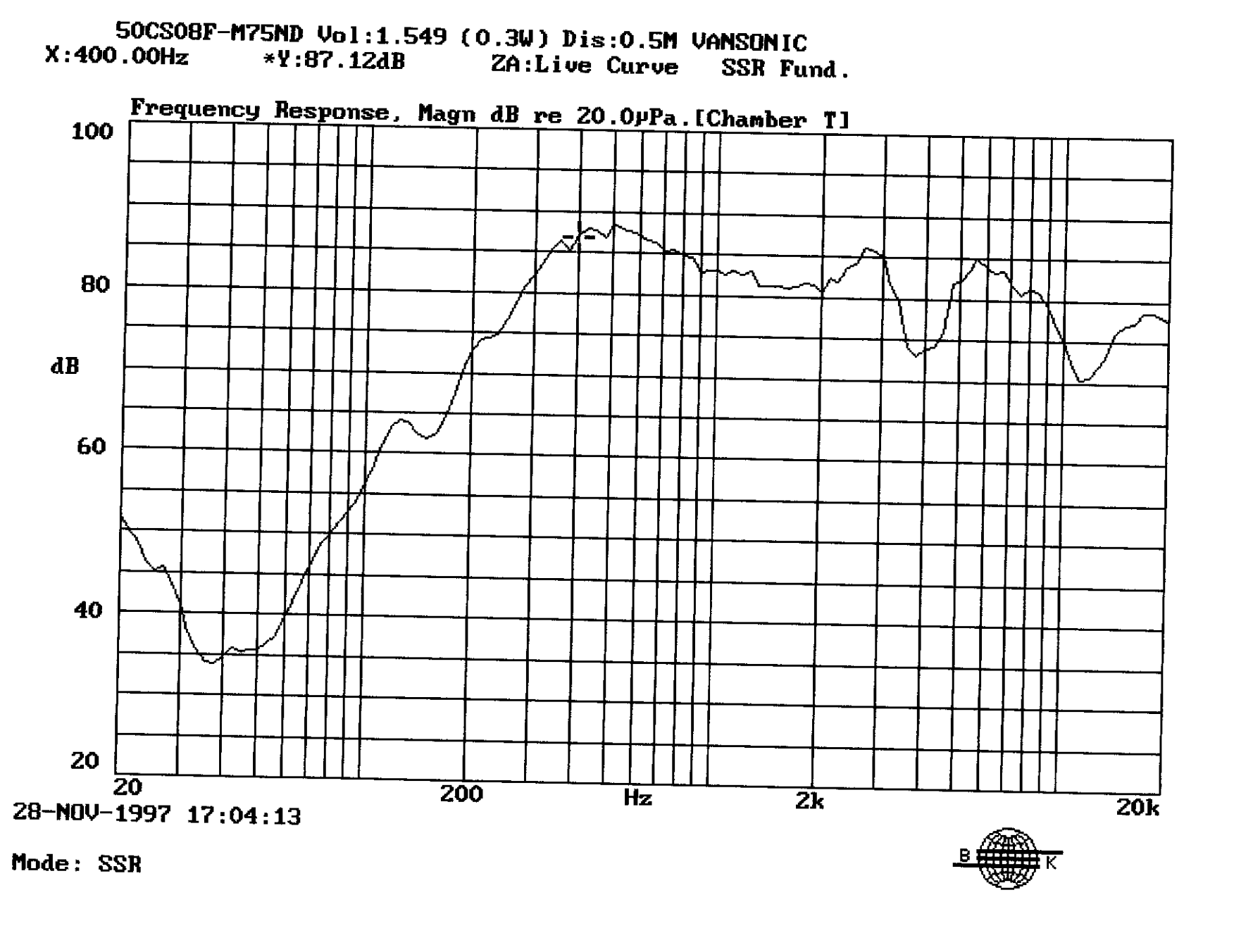
50CS08F-M75ND Vol:1.549 (0.3W) Dis:0.5M VANSONIC
X:400.00Hz *Y:87.12dB ZA:Live Curve SSR Fund.
Frequency Response, Magn dB re 20.0µPa.[Chamber T]
100
80
dB
60
40
20
20
200
Hz
2k
20k
28-NOV-1997 17:04:13
Mode: SSR
B
K

VECO VANSONIC ENTERPRISE CO.,LTD.

ELITALIA tel. 02.3361.1626 info@elitaliaweb.it
fax 02.2626.1009 www.elitaliaweb.it

1.	**MODEL:**	**50CS08FH** -M75NT(Clear Mylar) -M75ND(Black Mylar)
2.	Dimension	Outer Diameter **50** mm. Baffle Opening **44.2** mm.
		Height **Refer to Drawing** . Weight **12.4** Grams.
3.	Magnet	Materials **Rare Earth** . Size **12.5ØX 1.5** mm.
4	Nominal Lmpedance	**8** Ω ± **15** % At **1000** Hz.
5.	Power Rating	Normal **300** mW. Maximum **600** mW.
6.	Lowest Resonant Frequency	**430** ± **20** % Hz.
7.	Output Sound Pressure Lever	**83** ± **3** db / 0.3 Watt . 0.5 Meter.
	(S.P.L.)	Average at **600, 800, 1000, 1500** Hz.
8.	Frequency Range	**250** ~ **12000** Hz. Average S P L - 10 db.
9.	Distortion	**5** % Maximum At **1000** Hz. **300** mW.
10.	Abnormal Sound Test	Must Be Normal Test By **1.6** Volts. Sine Wave.
11.	Load Test	White Noise With Weighted Filter **1.6** Volts.(RMS) **24** Hrs.
12.	Polarity	Diaphragm shall move Forward when Apply a Positive DC.
		Current to the "+" or "Marked" Terminal.

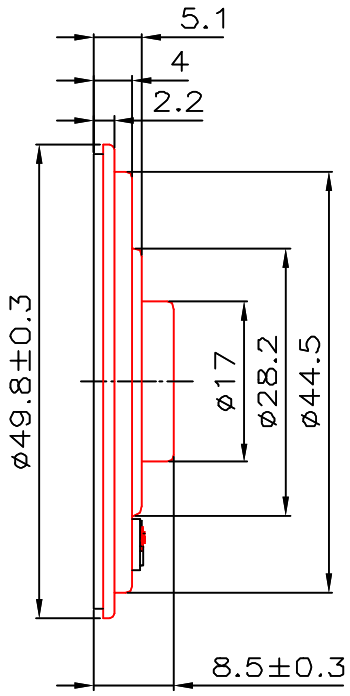

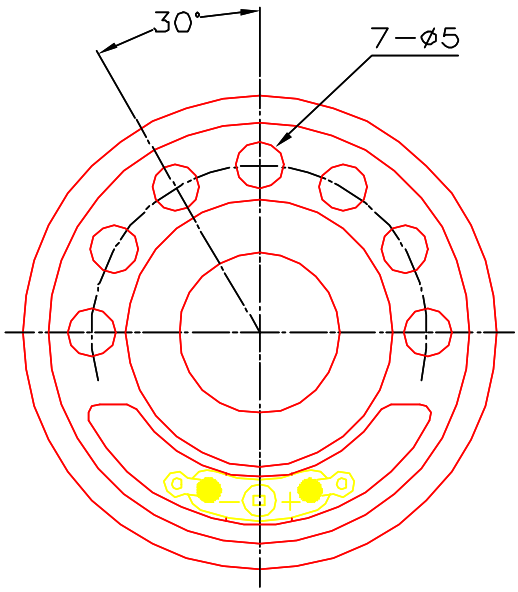

Unit : mm Housing Material : METAL

G:\50FH\50CS08FH-7N.DWG J12

50CS08FH-M75ND VOL:1.549V(0.3W) DIS:0.5M VANSONIC
X:1.0000kHz *Y:81.19dB ZA:Live Curve SSR Fund.

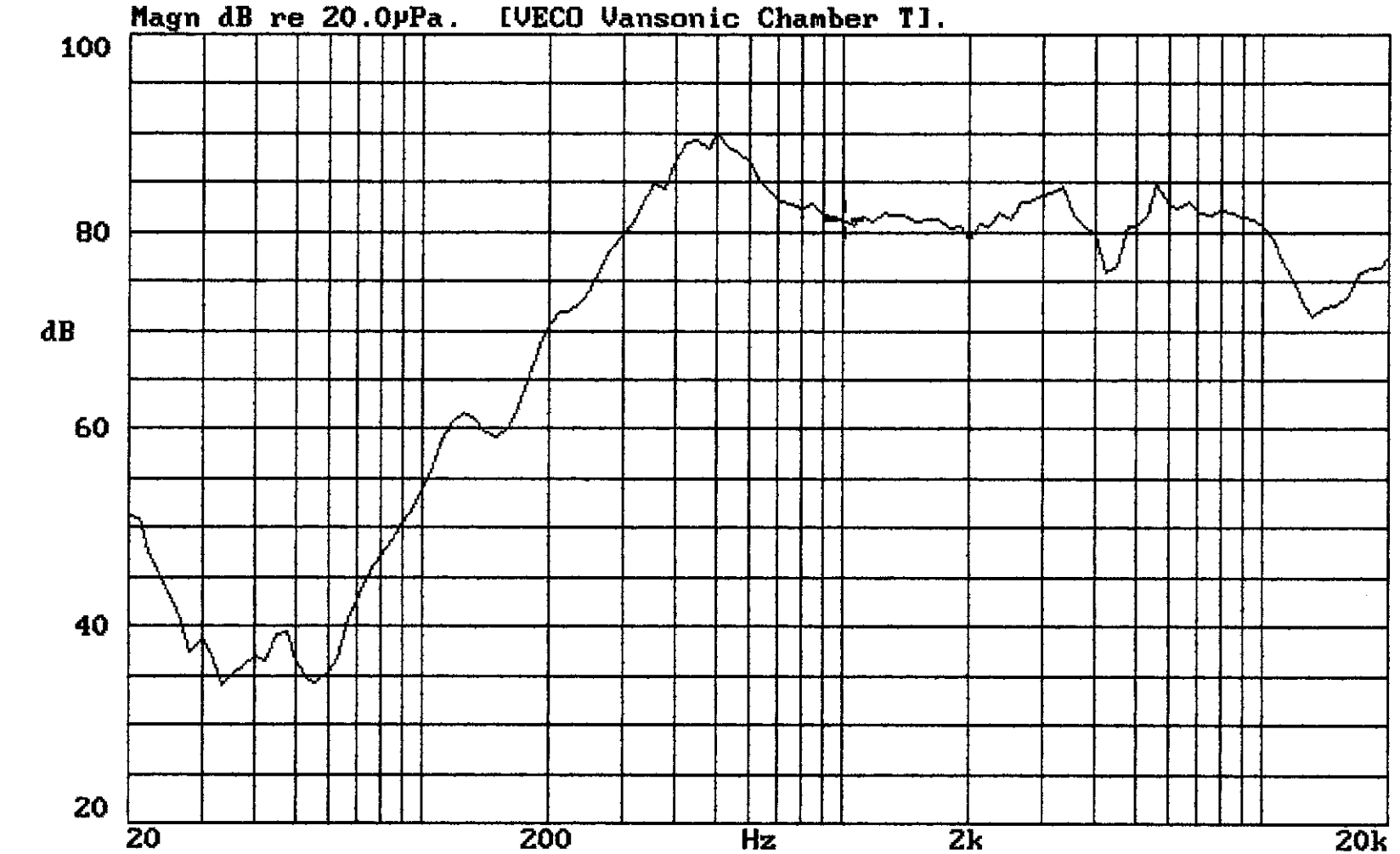

07-DEC-1999 10:49:00

Mode: SPEAKER

VECO VANSONIC ENTERPRISE CO.,LTD.

ELITALIA tel. 02.3361.1626 info@elitaliaweb.it
fax 02.2626.1009 www.elitaliaweb.it

1.	**MODEL:**	**P57CSF08-1-M75ND**
2.	Dimension	Outer Diameter ø**57** mm. Baffle Opening ø**52** mm.
		Height **Refer to Drawing**. Weight **16.7** Grams.
3.	Magnet	Materials **Rear Earth** . Size ø**12.5 X 1.5** mm.
4	Nominal Lmpedance	**8** Ω ± **15** % At **1200** Hz.
5.	Power Rating	Normal **1** W. Maximum **1.5** W.
6.	Lowest Resonant Frequency	**480** ± **20** % Hz.
7.	Output Sound Pressure Lever	**90** ± **3** db / 1.0 Watt **.** 0.5 Meter.
	(S.P.L.)	Average at **800, 1000, 1200, 1500** Hz.
8.	Frequency Range	**300** ~ **13000** Hz. Average S P L - 10 db.
9.	Distortion	**5** % Maximum At **1000** Hz. **1.0** W.
10.	Abnormal Sound Test	Must Be Normal Test By **2.83** Volts. Sine Wave.
11.	Load Test	White Noise With Weighted Filter **2.83** Volts.(RMS) **96** Hrs.
12.	Polarity	Diaphragm shall move Forward when Apply a Positive DC.
		Current to the "+" or "Marked" Terminal.

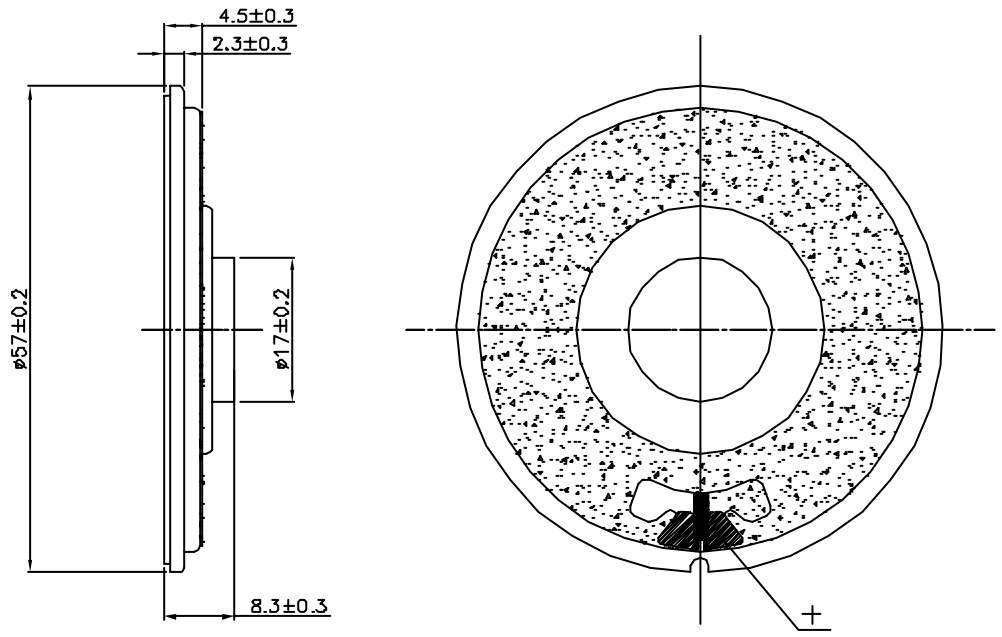

Unit : mm Housing Material : METAL

F:\SPEC\THIN\5757CS\57CSF08-1-75ND.DWG

P57CSF08-1-M75ND VOL:2.83V(1W) DIS:0.5M VANSONIC
X:1.0000kHz *Y:89.74dB ZA:1.0000 SSR Fund.

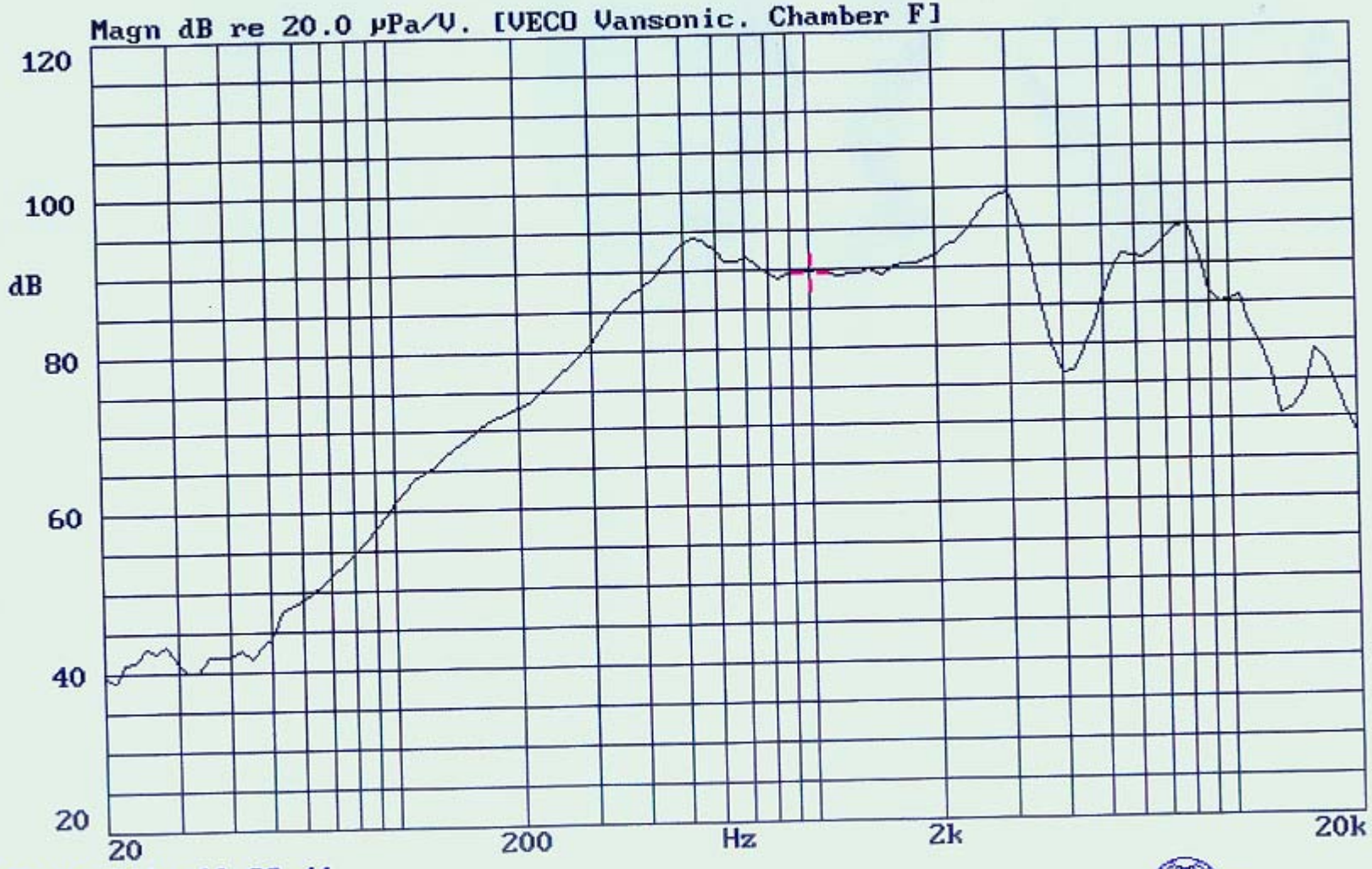

17-AUG-2004 10:32:41

Mode: SSR

VECO VANSONIC ENTERPRISE CO.,LTD.

ELITALIA

tel. 02.3361.1626 info@elitaliaweb.it
fax 02.2626.1009 www.elitaliaweb.it

1.	**MODEL:**	**57CS50G** -M75NT(Clear Mylar)-M75ND(Black Mylar)
2.	Dimension	Outer Diameter **57** mm. Baffle Opening **53** mm.
		Height **Refer to Drawing** . Weight **12** Grams.
3.	Magnet	Materials **Rare Earth** . Size ∅ **12.5 x 1.5** mm.
4	Nominal Lmpedance	**50** Ω ± **15** % At **1500** Hz.
5.	Power Rating	Normal **200** mW. Maximum **400** mW.
6.	Lowest Resonant Frequency	**385** ± **20** % Hz.
7.	Output Sound Pressure Lever	**80** ± **3** db / 0.2 Watt **.** 0.5 Meter.
	(S.P.L.)	Average at **600, 800, 1000, 1200** Hz.
8.	Frequency Range	**170** ~ **11800** Hz. Average S P L - 10 db.
9.	Distortion	**5** % Maximum At **1000** Hz. **200** mW.
10.	Abnormal Sound Test	Must Be Normal Test By **4.472**Volts. Sine Wave.
11.	Load Test	White Noise With Weighted Filter **4.472**Volts.(RMS) **24** Hrs.
12.	Polarity	Diaphragm shall move Forward when Apply a Positive DC.
		Current to the "+" or "Marked" Terminal.

MOUNTING NOTICE

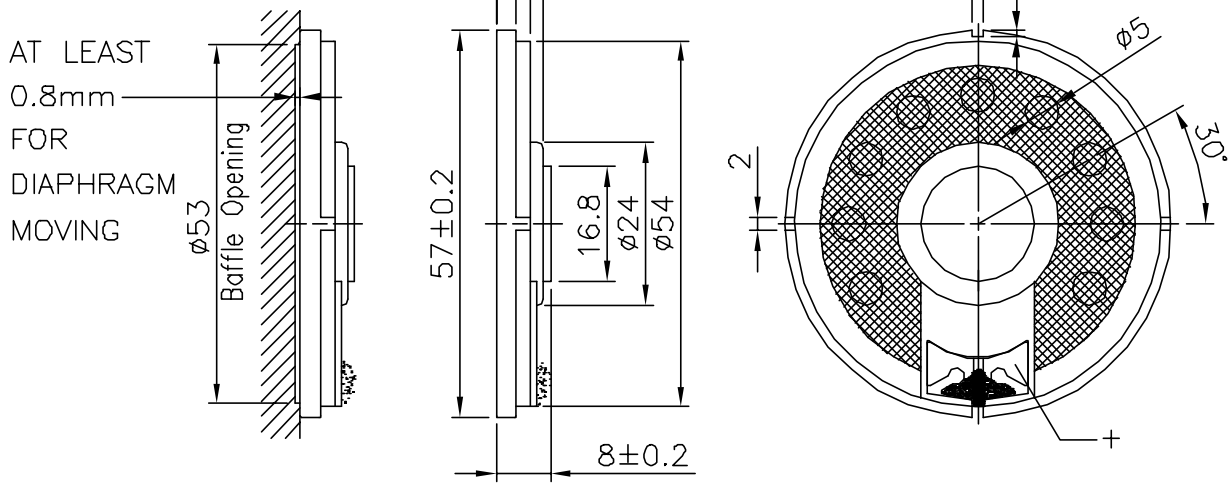

Unit : mm Housing Material : ABS

F:\\SPEC\THIN\57\57G-100.DWG J01

57CS100G-75ND VOL:4.472V(0.2W) DIS:0.5M VANSONIC

X:1.0000kHz *Y:79.27dB ZA:Live Curve SSR Fund.

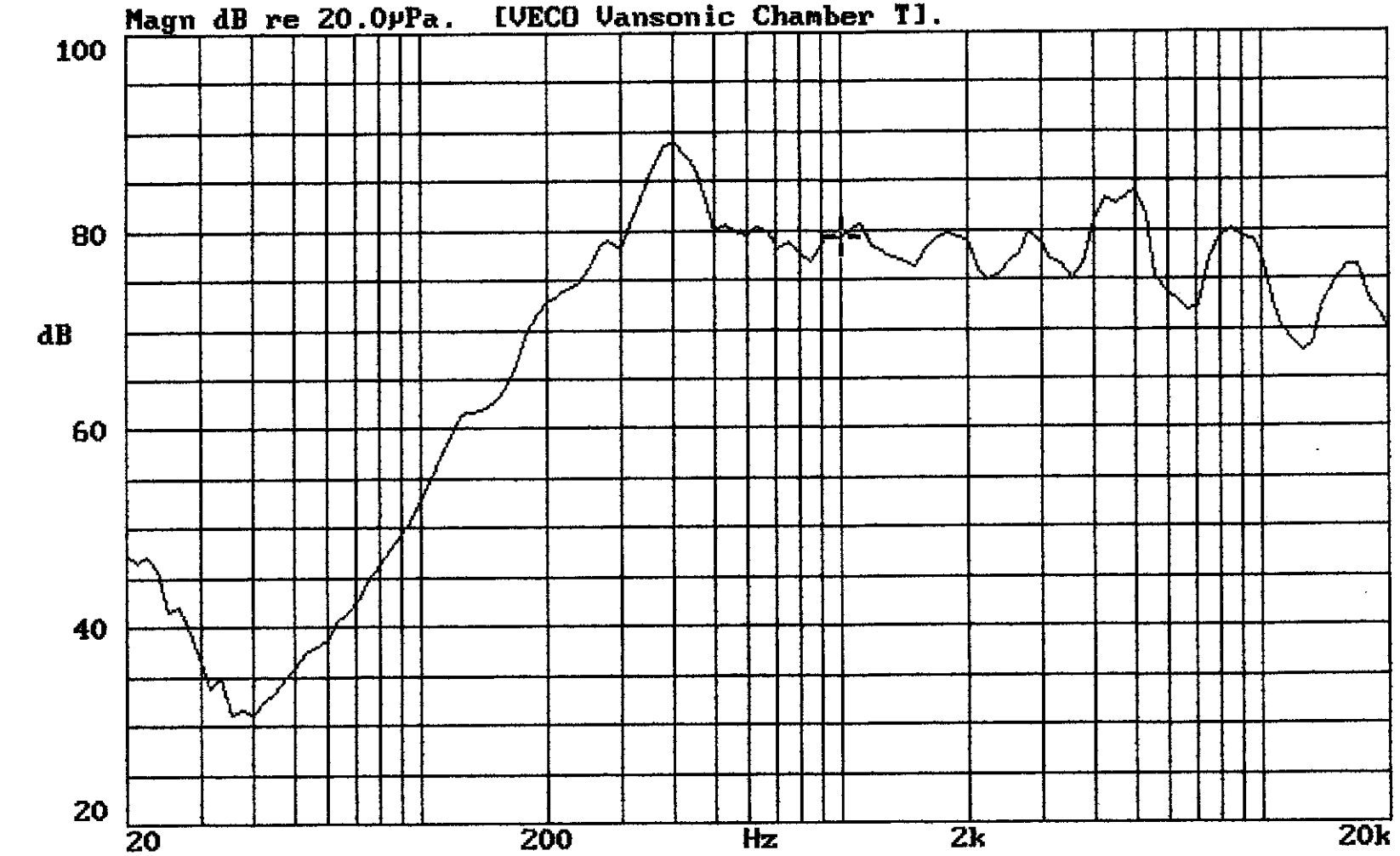

09-AUG-2002 17:17:33

Mode: SPEAKER

VECO VANSONIC ENTERPRISE CO.,LTD.

ELITALIA

tel. 02.3361.1626 info@elitaliaweb.it
fax 02.2626.1009 www.elitaliaweb.it

1.	**MODEL:**	**57CS08G** -M75NT(Clear Mylar)-M75ND(Black Mylar)
2.	Dimension	Outer Diameter **57** mm. Baffle Opening **53** mm.
		Height **Refer to Drawing** . Weight **12** Grams.
3.	Magnet	Materials **Rare Earth** . Size ø **12.5 x 1.5** mm.
4	Nominal Lmpedance	**8** Ω ± **15** % At **1500** Hz.
5.	Power Rating	Normal **200** mW. Maximum **400** mW.
6.	Lowest Resonant Frequency	**350** ± **20** % Hz.
7.	Output Sound Pressure Lever	**80** ± **3** db / 0.2 Watt . 0.5 Meter.
	(S.P.L.)	Average at **600, 800, 1000, 1200** Hz.
8.	Frequency Range	**200** ~ **20000** Hz. Average S P L - 10 db.
9.	Distortion	**5** % Maximum At **1000** Hz. **200** mW.
10.	Abnormal Sound Test	Must Be Normal Test By **1.3** Volts. Sine Wave.
11.	Load Test	White Noise With Weighted Filter **1.3** Volts.(RMS) **24** Hrs.
12.	Polarity	Diaphragm shall move Forward when Apply a Positive DC.
		Current to the "+" or "Marked" Terminal.

MOUNTING NOTICE

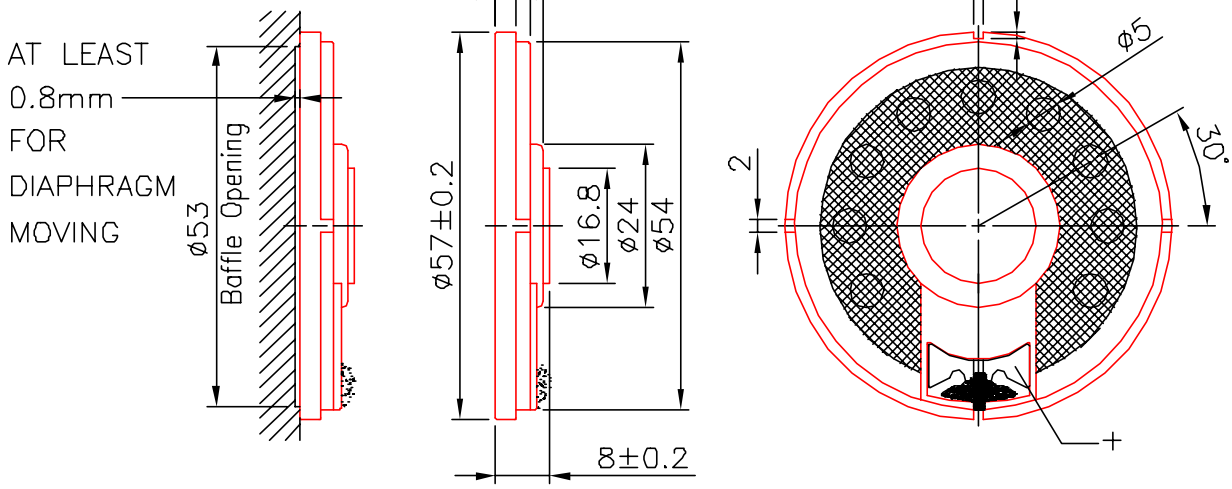

Unit : mm Housing Material : ABS

57CS08G-M75ND VOL:1.265V(0.2W) DIS:0.5M VANSONIC
X:1.0000kHz *Y:80.48dB ZA:Live Curve SSR Fund.

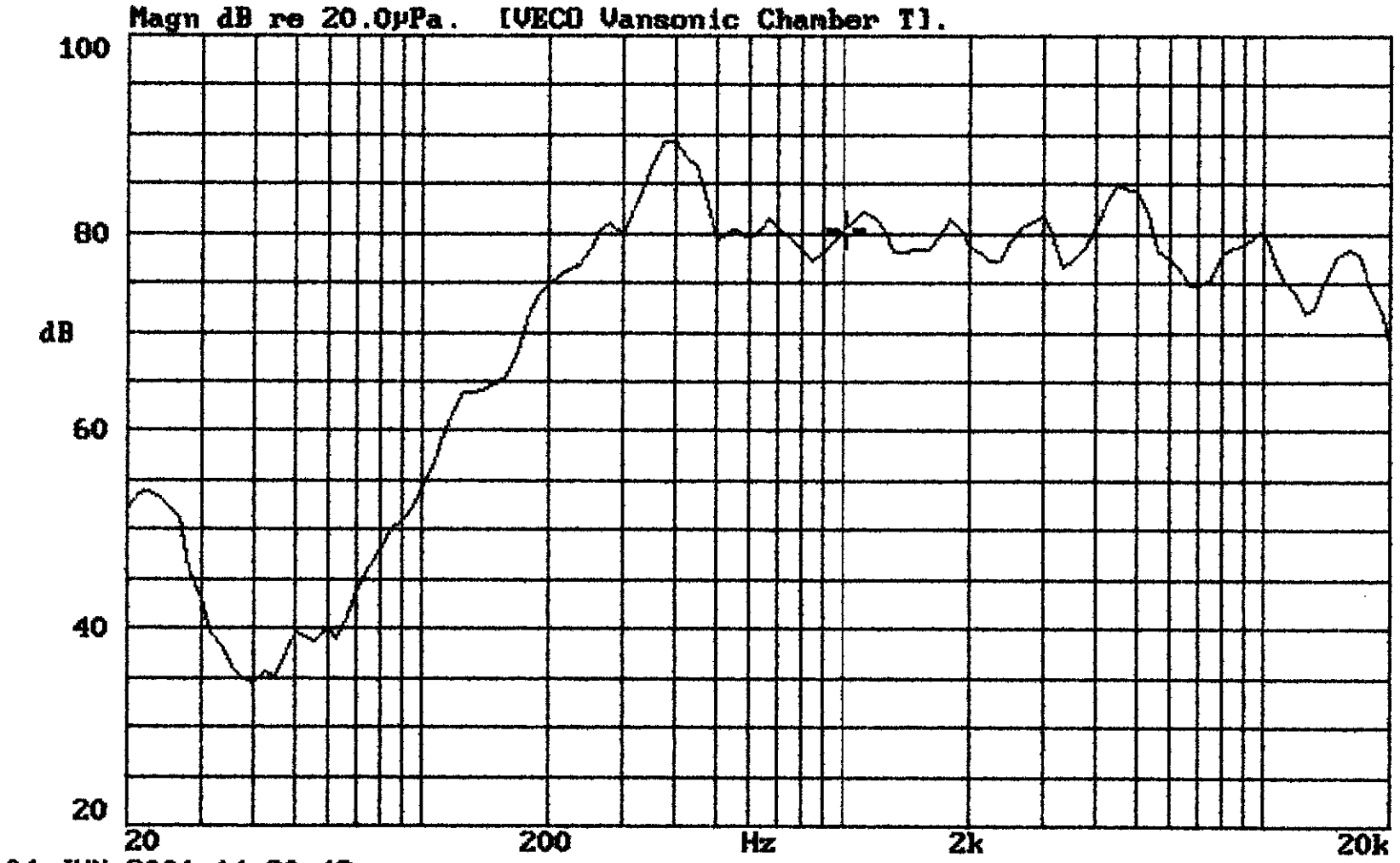

04-JUN-2001 14:30:42

Mode: SPEAKER