EC (AC TO DC) FAN

92*92*32mm

RT9232 Series

RUNDA
www.szrunda.com

外框材质:环保防火PBT
Frame:Thermoplastic PBT UL94-V0
扇叶材质:环保防火PBT
Imperller:Thermoplastic PBT UL94-V0
轴承结构:双滚珠或长寿命含油结构
Bearing system:2Ball or Long life sleeve
单体风扇重量:150g
Unit Weight:150g

DIMENSIONS DRAWING

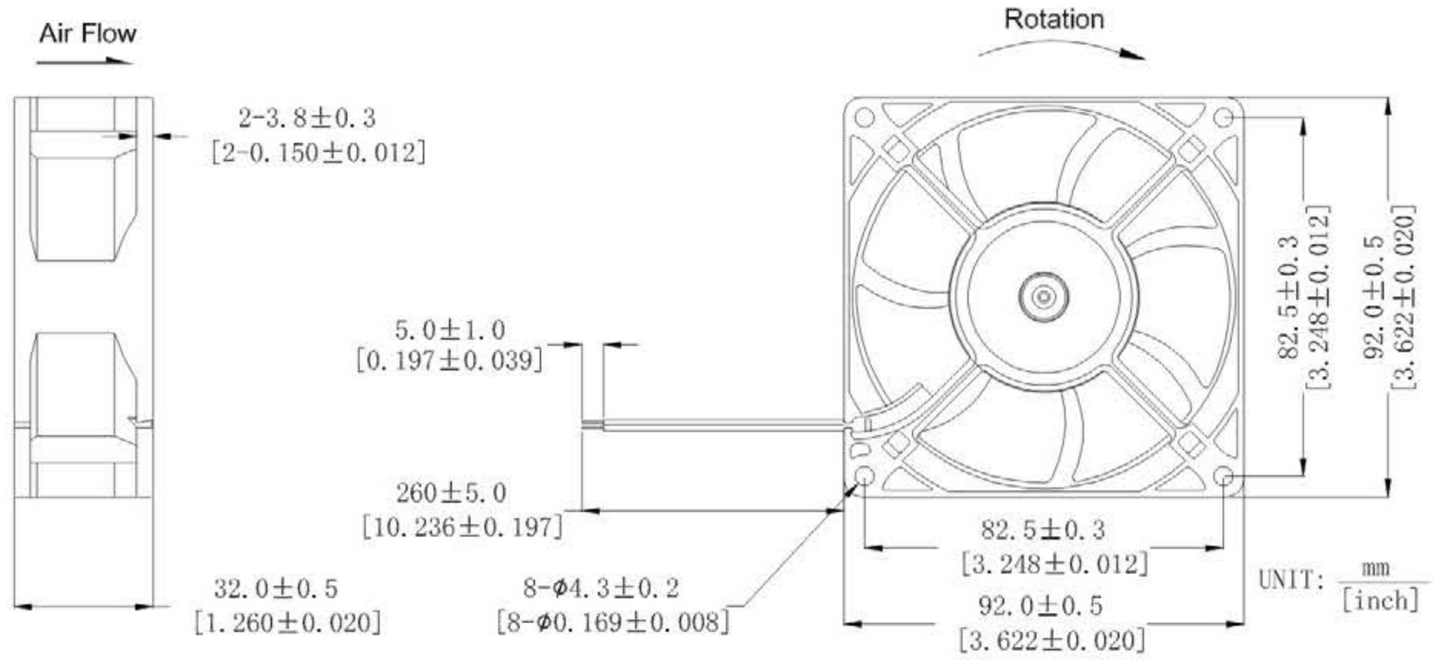

可选的功能参照列表
(Available Functions)

1.马达保护(Motor protection)

RP	SS	AS	CL
○	●	●	●

2.信号输出(Signal output)

FG	RD	$\overline{RD}$	LD
●	●	●	●

3.调速方式(Speed control mode)

PWM	TP	VC	RC	CS
●	●	●	●	●

Fan Performance Curve

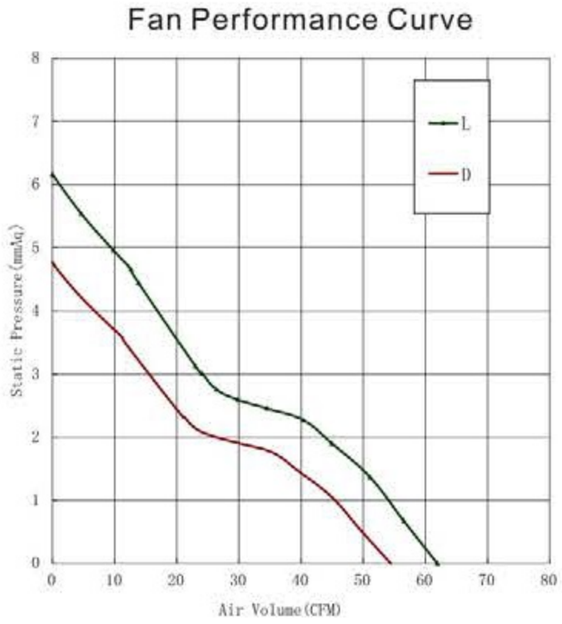

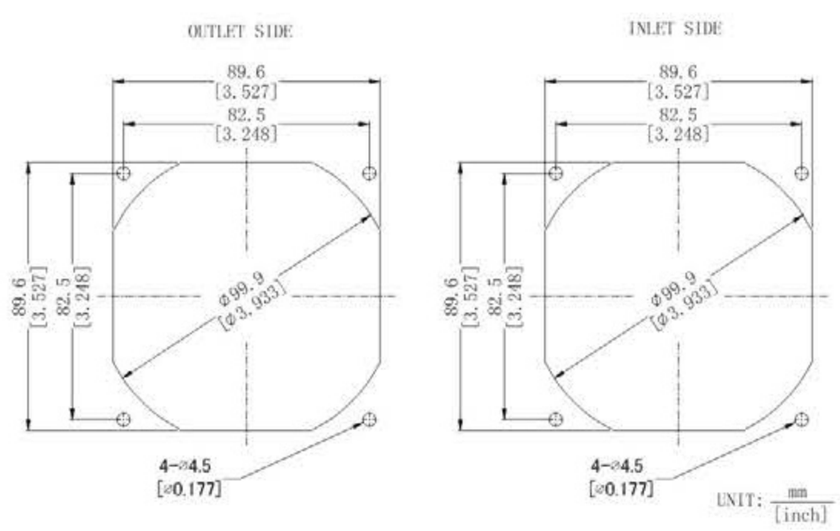

Part Number	Voltage(V)	Fre.(HZ)	Power(W)	Speed(RPM)	Air flow(Q)		Pressure(P)		Noise(dBA)
产品编号	电压范围	频率范围	功率	转速	(CFM) 风量	m^3/min	(Mmaq)风压	(In H_2O)	噪音
RT9232x11D	110(80~120)	45~65	3.6	2800	54.41	1.54	4.76	0.19	39.6
RT9232x11L		45~65	4.2	3200	61.92	1.75	6.16	0.24	43.2
RT9232x22D	220(120~240)	45~65	3.6	2800	54.41	1.54	4.76	0.19	39.6
RT9232x22L		45~65	4.2	3200	61.92	1.75	6.16	0.24	43.2

★ 如果您需要的转速或电压或功能不在这份清单上，请与我们业务联系。
If you want another rpm or voltage or functions which one is not in the list,please contact with our sales.

★ 提示1:功能的具体信息参照产品目录前页篇章。
Notes1:The catalog have detail information in the front page for the functions.

★ 提示2:产品详细信息请参照承认书。
Notes2:Product have a detail in the approval sheet.

★ 提示3:产品规格变更不另行通知。
Notes3:Specifications are subject to change without notice.

★ 提示4:该款机型可制作相同转速的，可在AC110V和AC220V双电压下使用。
Note4:This model can be made in the same speed and used in AC110V, AC220V both.