DC AXIAL FAN

RUNDA
www.szrunda.com

80x80x25mm

RD8025A Series



外框材质:环保防火PBT
Frame:Thermoplastic PBT UL94-V0
扇叶材质:环保防火PBT
Imperller:Thermoplastic PBT UL94-V0
轴承结构:双滚珠或长寿命含油结构
Bearing system:2Ball or Long life sleeve
单体风扇重量:75g
Unit Weight:75g

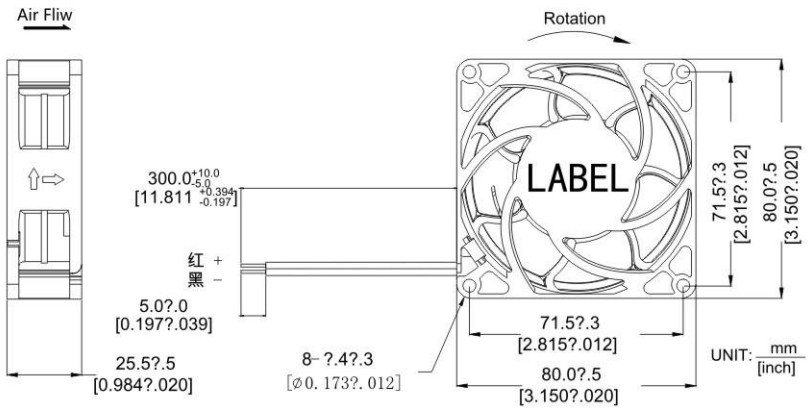

可选的功能参照列表 (Available Functions)

1.马达保护(Motor protection)

RP	SS	AS	CL
●	●	●	●

2.信号输出(Signal output)

FG	RD	RD	LD
●	●	●	●

3.调速方式(Speed control mode)

PWM	TP	VC	RC	CS
●	●	●	●	●

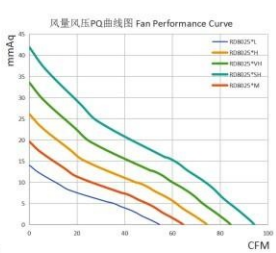

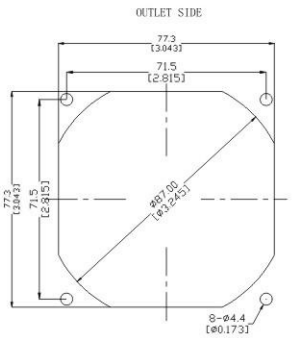

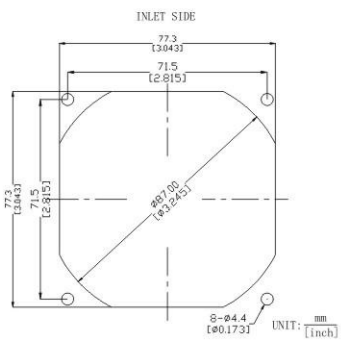

Part Number	Voltage(V)	Current(A)	Power(W)	Speed(RPM)	Air flow(Q)		Pressure(P)		Noise(dBA)
产品编号	电压范围	额定电流	功率	转速	(CFM) 风量	m^3/min	(mmAq)风压	(In H_2O)	噪音
RD8025B12L2	12(7~14)	0.28	3.36	5500	54.60	1.55	14.05	0.55	43.21
RD8025B12M2		0.43	5.16	6500	64.53	1.83	19.62	0.77	47.51
RD8025B12H2		0.64	7.68	7500	74.45	2.11	26.12	1.03	53.57
RD8025B12VH2		0.97	11.64	8500	84.38	2.39	33.55	1.32	57.42
RD8025B12SH2		1.35	16.20	9500	94.31	2.68	41.91	1.65	62.01
RD8025B24L2	24(15~27)	0.14	3.36	5500	54.60	1.55	14.05	0.55	43.21
RD8025B24M2		0.22	5.28	6500	64.53	1.83	19.62	0.77	47.51
RD8025B24H2		0.32	7.68	7500	74.45	2.11	26.12	1.03	53.57
RD8025B24VH2		0.49	11.76	8500	84.38	2.39	33.55	1.32	57.42
RD8025B24SH2		0.68	16.32	9500	94.31	2.68	41.91	1.65	62.01
RD8025B48L2	48(35~57)	0.07	3.36	5500	54.60	1.55	14.05	0.55	43.21
RD8025B48M2		0.11	5.28	6500	64.53	1.83	19.62	0.77	47.51
RD8025B48H2		0.16	7.68	7500	74.45	2.11	26.12	1.03	53.57
RD8025B48VH2		0.25	12.00	8500	84.38	2.39	33.55	1.32	57.42
RD8025B48SH2		0.34	16.32	9500	94.31	2.68	41.91	1.65	62.01

★ 如果您需要的转速或电压或功能不在这份清单上，请与我们业务联系。
If you want another rpm or voltage or functions which one is not in the list,please contact with our sales.

★ 提示1:功能的具体信息参照产品目录前页篇章。
Notes1:The catalog have detail information in the front page for the functions.

★ 提示2:产品详细信息请参照承认书。
Notes2:Product have a detail in the approval sheet.

★ 提示3:产品规格变更不另行通知。
Notes3:Specifications are subject to change without notice.

EL.ITALIA SRL
www.elitaliaweb.it
info@elitaliaweb.it
02.26261009
02.33611626