DC AXIAL FAN

80X80X56mm

RD8056 Series

RUNDA
www.szrunda.com



外框材质:环保防火PBT
Frame:Thermoplastic PBT UL94-V0
扇叶材质: 环保防火PBT
Imperller:Thermoplastic PBT UL94-V0
轴承结构: 双滚珠
Bearing system:2Ball
单体风扇重量:220g
Unit Weight:220g

DIMENSIONS DRAWING

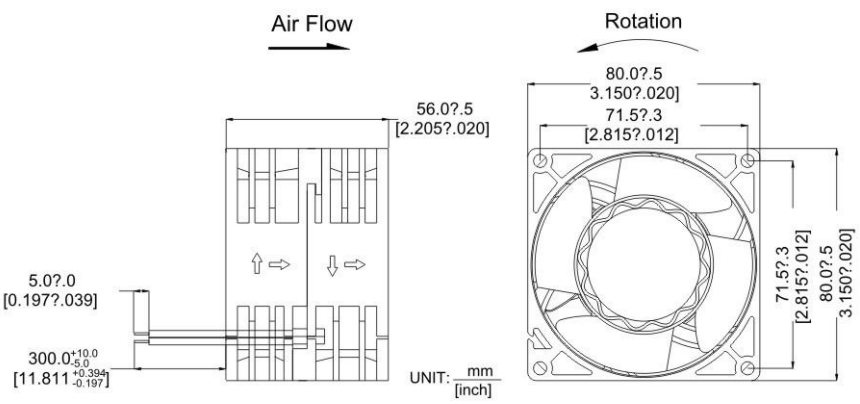

可选的功能参照列表
(Available Functions)

1.马达保护(Motor protection)

RP	SS	AS	CL
●	●	●	●

2.信号输出(Signal output)

FG	RD	RD	LD
●	●	●	●

3.调速方式(Speed control mode)

PWM	TP	VC	RC	CS
●	●	●	●	●

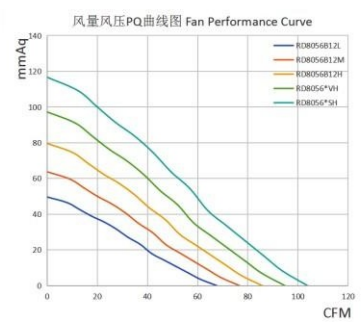

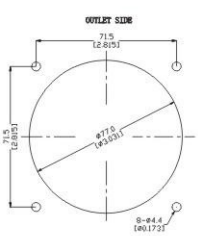

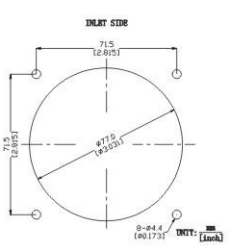

Part Number	Voltage(V)	Current(A)	Power(W)	Speed(RPM)	Air flow(Q)		Pressure(P)		Noise(dBA)
产品编号	电压范围	额定电流	功率	转速	(CFM) 风量	m^3/min	(mmAq)风压	(In H_2O)	噪音
RD8056B12L	12(7~14)	1.14	13.68	15000	67.68	1.92	49.63	1.95	53.20
RD8056B12M		1.38	16.56	17000	76.71	2.18	63.75	2.51	57.46
RD8056B12H		1.62	19.44	19000	85.73	2.43	79.63	3.14	62.05
RD8056B12VH		2.00	24.00	21000	94.76	2.69	97.28	3.83	67.02
RD8056B12SH		2.43	29.16	23000	103.78	2.94	116.69	4.59	72.38
RD8056B24L	24(15~27)	0.57	13.68	15000	67.68	1.92	49.63	1.95	53.20
RD8056B24M		0.69	16.56	17000	76.71	2.18	63.75	2.51	57.46
RD8056B24H		0.81	19.44	19000	85.73	2.43	79.63	3.14	62.05
RD8056B24VH		1.00	24.00	21000	94.76	2.69	97.28	3.83	67.02
RD8056B24SH		1.22	29.28	23000	103.78	2.94	116.69	4.59	72.38
RD8056B48L	48(35~57)	0.29	13.92	15000	67.68	1.92	49.63	1.95	53.20
RD8056B48M		0.35	16.80	17000	76.71	2.18	63.75	2.51	57.46
RD8056B48H		0.41	19.68	19000	85.73	2.43	79.63	3.14	62.05
RD8056B48VH		0.50	24.00	21000	94.76	2.69	97.28	3.83	67.02
RD8056B48SH		0.61	29.28	23000	103.78	2.94	116.69	4.59	72.38

★ 如果您需要的转速或电压或功能不在这份清单上，请与我们业务联系。
If you want another rpm or voltage or functions which one is not in the list,please contact with our sales.

★ 提示1:功能的具体信息参照产品目录前页篇章。
Notes1:The catalog have detail information in the front page for the functions.

★ 提示2:产品详细信息请参照承认书。
Notes2:Product have a detail in the approval sheet.

★ 提示3:产品规格变更不另行通知。

EL.ITALIA SRL
02.33611626 02.26261009 info@elitaliaweb.it www.elitaliaweb.it