REV.	DESCRIPTION	DATE	DRAFTER	APPROVER
A1	DWG.REL	2020.05.17	DENG	JIN

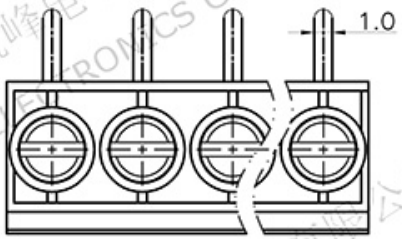

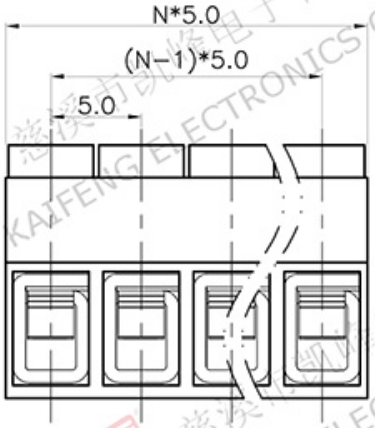

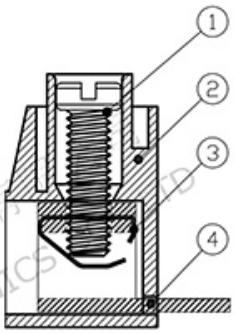

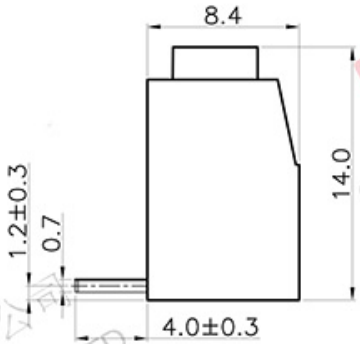

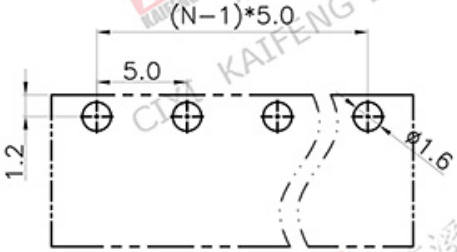

P.C.B.LAYOUT

- Material
  - ①Screws : M2.5 steel, Zinc plated, "−" slot type
  - ②Housing : PA66, UL94V−0
  - ③Reed : Copper alloy,Ni plated or stainless steel
  - ④Pin header : Copper alloy, Tin plated
- Electrical

	UL	IEC
Rated voltage :	300V	250V
Rated current :	15A	22A

  - Contact resistance : 20mΩ(Max)
  - Insulation resistance: 500MΩ/DC500V
  - Withstanding Voltage : AC2000V/1min
  - Wire range: 22−14AWG 0.5−2.5mm²
- Mechanical
  - Operating temperature:−40℃∽+105℃
  - Soldering temperature:250℃±5/5sec
  - Torque: 0.4N.m (3.54Lb.in)
  - Strip length: 6−7mm
- RoHS compliance

HOW TO ORDER

KF167 R −5.0−XXP−1 X−XXXXX

- KF167 → MODEL
- R → V: straight needle; R: bending needle
- 5.0 → Pitch:mm
- XXP → No.of poles: 2~24P
- 1 → 1:Single Pitch; 2:Double Pitch
- X → Color: G:Green, K:Black, O:Orange, GR:Gray, R:Red, W:White, B:Blue
- XXXXX → Customer Request

Pitch range			Nominal dimension range						
>0 ~ 6	>6 ~ 10	>10 ~ 24	>0 ~ 30	>30 ~ 60	>60 ~ 100	>100 ~ 150	>150	0.1/10	∠
±0.15	±0.20	±0.30	±0.30	±0.50	±0.70	±1.00	±1.30	±2'	

DRAWING TYPE	CUSTOMER DRAWING		
SCALE	1:1	SHEET	1 OF 1
DRAWING NO.	W15000072		

PROJECTION		TITLE	KF167R−5.0−XXP−1X
UNIT	mm		
SHEET SIZE	A4	SERIES	KF167

®慈溪市凯峰电子有限公司
CIXI KAIFENG ELECTRONICS CO.,LTD

REV.	DESCRIPTION	DATE	DRAFTER	APPROVER
A1	DWG.REL	2020.05.17	DENG	JIN

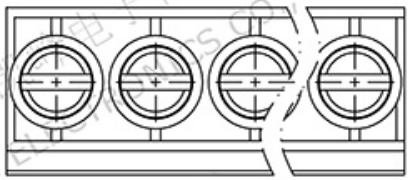

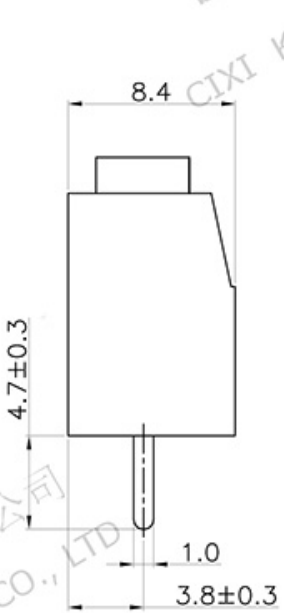

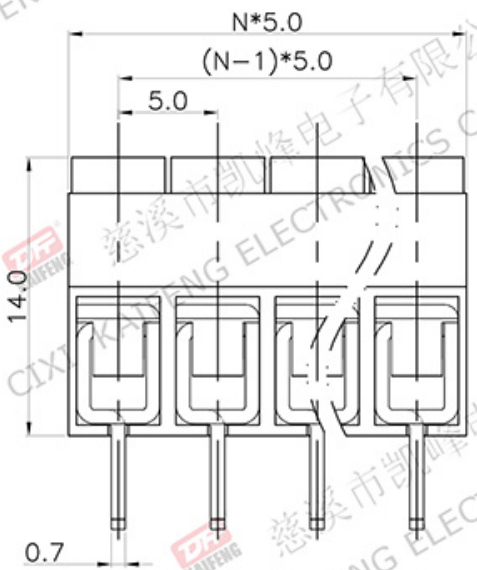

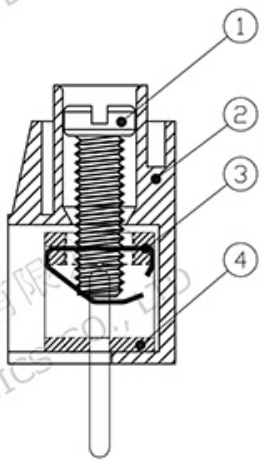

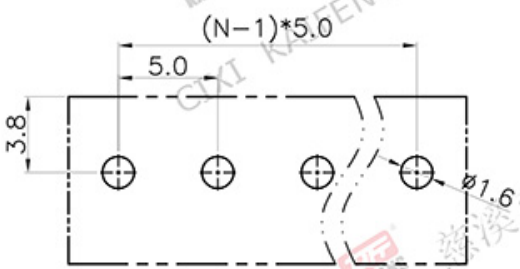

P.C.B.LAYOUT

- Material
  - ①Screws : M2.5 steel, Zinc plated, "−" slot type
  - ②Housing : PA66, UL94V−0
  - ③Reed : Copper alloy,Ni plated or stainless steel
  - ④Pin header : Copper alloy, Tin plated
- Electrical

	UL	IEC
Rated voltage :	300V	250V
Rated current :	15A	22A

  - Contact resistance : 20mΩ(Max)
  - Insulation resistance: 500MΩ/DC500V
  - Withstanding Voltage : AC2000V/1min
  - Wire range: 22−14AWG 0.5−2.5mm²
- Mechanical
  - Operating temperature:−40℃～+105℃
  - Soldering temperature:250℃±5/5sec
  - Torque: 0.4N.m (3.54Lb.in)
  - Strip length: 6−7mm
- RoHS compliance

HOW TO ORDER

KF167 V −5.0−XXP−1 X−XXXXX

- KF167 → MODEL
- V → V: straight needle; R: bending needle
- 5.0 → Pitch:mm
- XXP → No.of poles: 2~24P
- 1 → 1:Single Pitch; 2:Double Pitch
- X → Color: G:Green, R:Red, K:Black, W:White, O:Orange, B:Blue, GR:Gray
- XXXXX → Customer Request

Pitch range			Nominal dimension range						
>0 ~ 6	>6 ~ 10	>10 ~ 24	>0 ~ 30	>30 ~ 60	>60 ~ 100	>100 ~ 150	>150	0.1/10	∠
±0.15	±0.20	±0.30	±0.30	±0.50	±0.70	±1.00	±1.30		±2'

DRAWING TYPE	CUSTOMER DRAWING		
SCALE	1:1	SHEET	1 OF 1
DRAWING NO.	W15000062		

PROJECTION		TITLE	KF167V−5.0−XXP−1X
UNIT	mm		
SHEET SIZE	A4	SERIES	KF167

®慈溪市凯峰电子有限公司
CIXI KAIFENG ELECTRONICS CO.,LTD

慈溪市凯峰电子有限公司 CIXI KAIFENG ELECTRONICS CO., LTD