Detector
Vertical Type

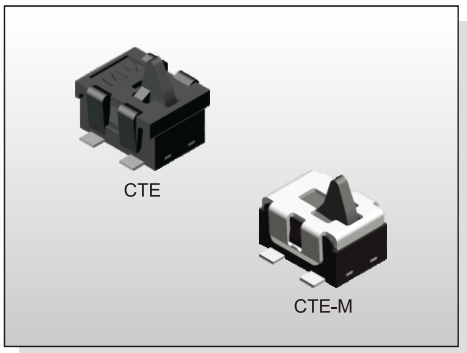

FEATURES

※Guiding post offers easy orientation
※Operation force: 35gf max.

APPLICATION

※Open/close detection
※Notebook
※DSC

SPECIFICATION

Contact Rating	0.1mA~100mA, 20mV~5V DC
Contact Resistance	500mΩ max.
Insulation Resistance	100MΩ min. 250V DC
Dielectric Strength	250V AC/1 minute
Operating Force	35gf max.
Travel	1.05mm
Operating Life	80,000 cycles
Operating Temp.	-15°C ~ +70°C
Storage Temp.	-40°C ~ +85°C

HOW TO ORDER

C T E - □ - □ - □ - □

- Package: T/R=Tape & Reel
- V=RoHS & Lead Free Solderable, Q=Halogen Free
- □=Plastic Cover, M=Metal Cover
- □=Without Post, P=Post

CIRCUIT

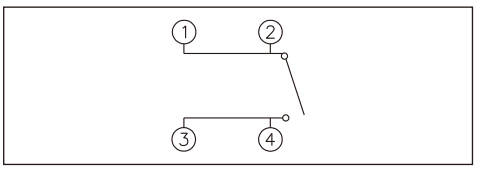

PACKAGE

<Tape & Reel>
1800 pcs

CTE-M

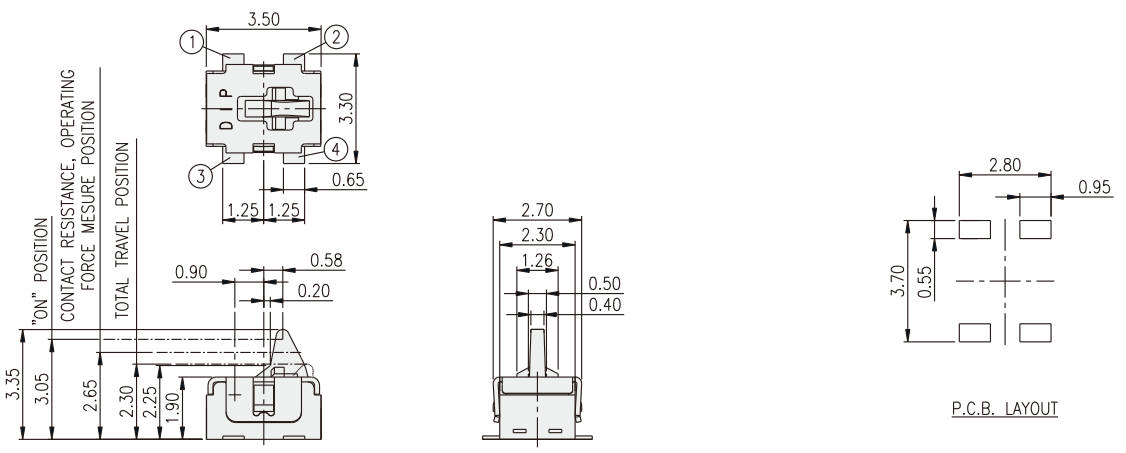

CTE-P

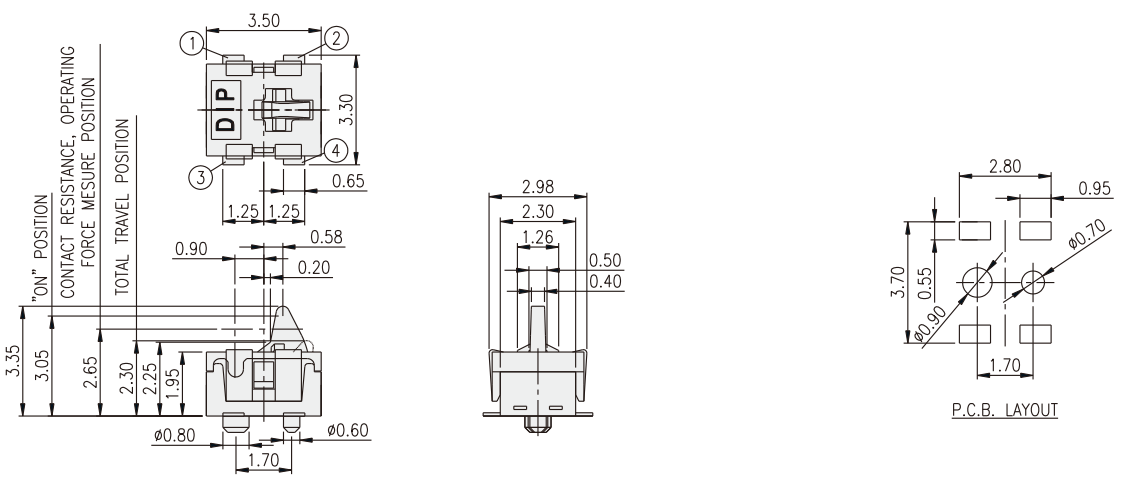

EL.ITALIA SRL
+39 02.33611626 www.elitaliaweb.it
CONTACT US info@elitaliaweb.it