2.8x3.8
Side Push / Vertical Push Type

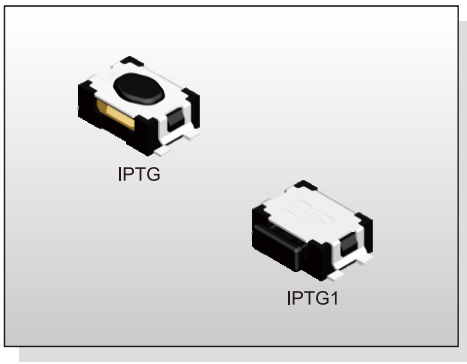

FEATURES
※Compact-sized 2.8x3.8mm
※Vertical or side actuation
※Wide stem

APPLICATION
※Automotive
※Portable electronic device
※Control panel

SPECIFICATION

Contact Rating	50mA, 12V DC
Contact Resistance	100mΩ max.
Insulation Resistance	100MΩ min. 500V DC
Dielectric Strength	100V AC/1 minute
Operating Force	100±50gf, 160±50gf (Vertical Push) 200±65gf (Side Push) 300±80gf, 400±80gf (Vertical Push)
Travel	0.13mm (Vertical Push) 0.20mm (Side Push)
Operating Life	50,000 cycles for 300/400gf 100,000 cycles for 100/160/200gf
Operating Temp.	-20°C ~ +70°C
Storage Temp.	-30°C ~ +80°C

HOW TO ORDER

I P T □ □ □ □ □ - □ - □ - □

- □=Without Ground Pin (For Vertical Push) G=With Ground Pin
- □=Without Post P=With Post
- Height for Vertical Push: 1=Side Push 2=Vertical Push H: 1.90mm 3=Vertical Push H: 2.50mm
- Operation Force: 2=100gf (Only for Vertical Push) 3=160gf (Only for Vertical Push) 4=200gf (Only for Side Push) 5=300gf (Only for Vertical Push) 6=400gf (Only for Vertical Push)
- Actuator Color: K=Black W=White
- Contact Material: □=Silver A=Gold
- V=RoHS & Lead Free Solderable Q=Halogen Free
- Package: T/R=Tape & Reel

CIRCUIT

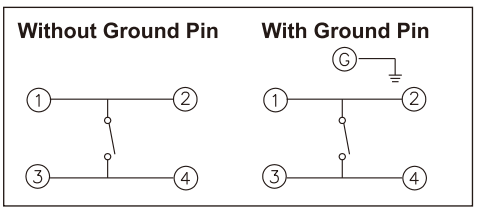

PACKAGE
<Tape & Reel>
IPTGP1: 3000 pcs
IPTG1: 3500 pcs
IPTG2: 7000 pcs
IPTG3: 6000 pcs

IPTG

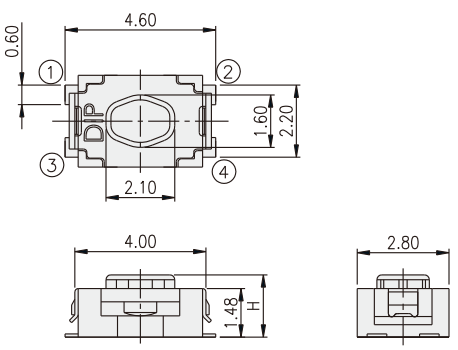

PART NO.	H
IPTG2	1.90
IPTG3	2.50

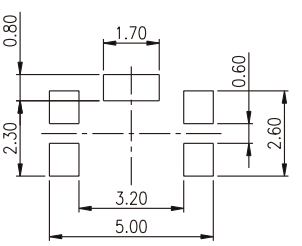

P.C.B. LAYOUT

IPTG1

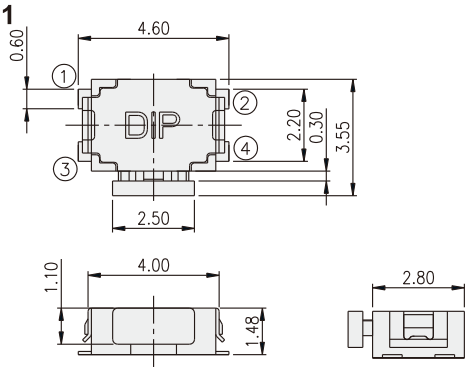

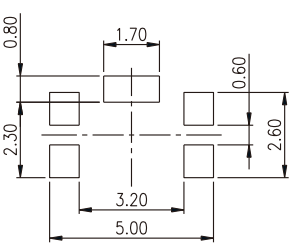

P.C.B. LAYOUT